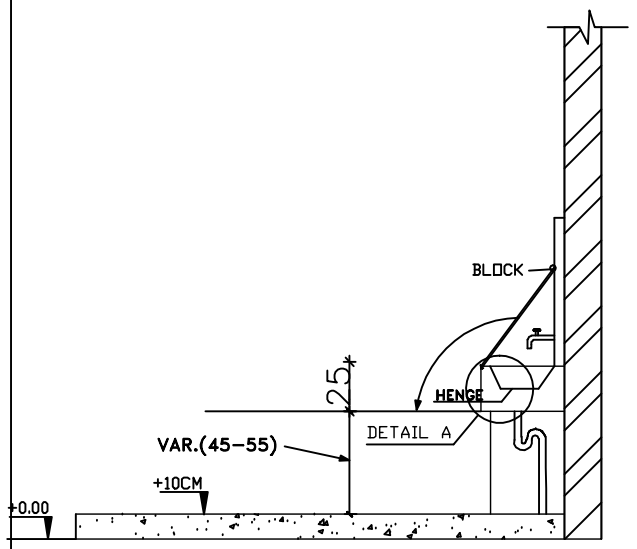

SIDE ELEVATION

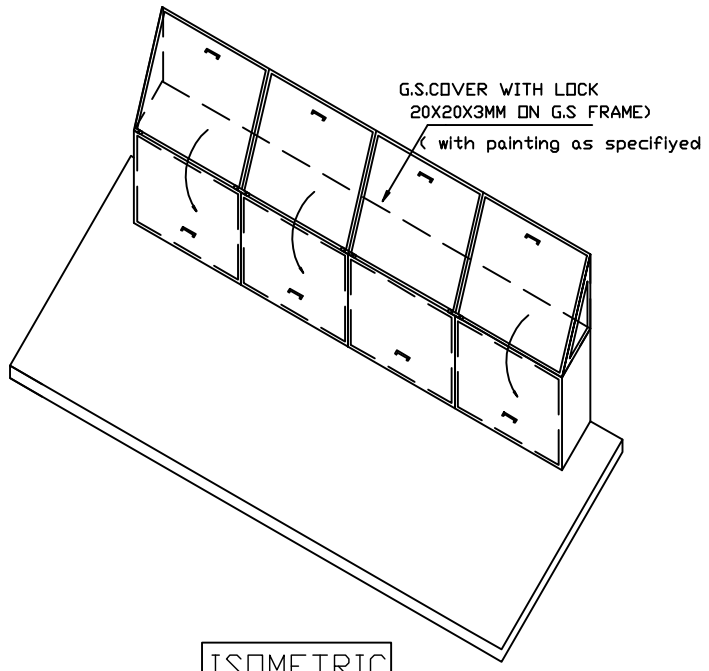

ISOMETRIC

NOTES:
H= 60cm TO PRIMARY SCHOOLS
75cm FOR SECONDARY SCHOOLS

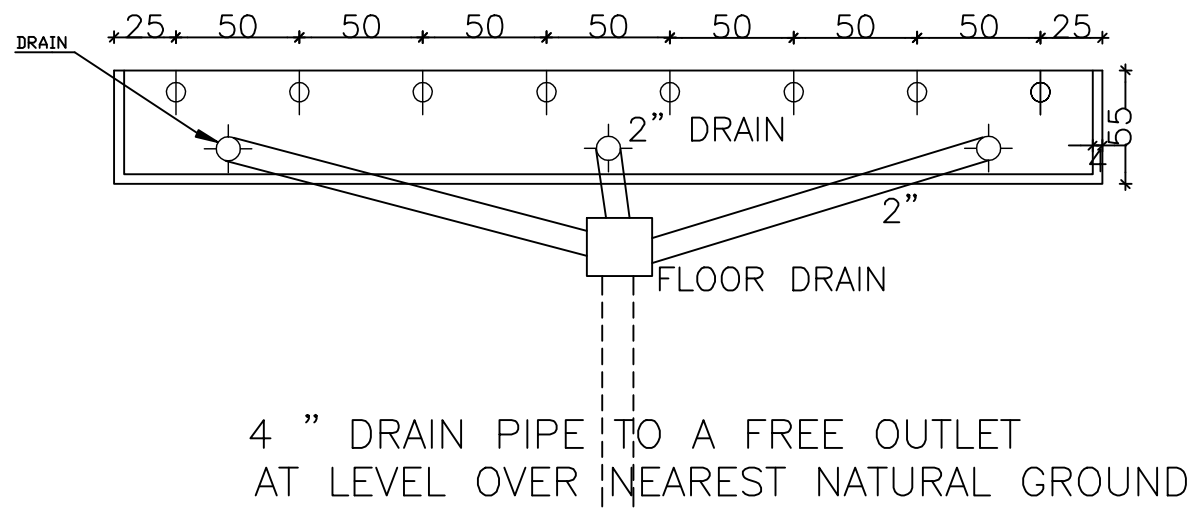

FOUNTAIN PLAN

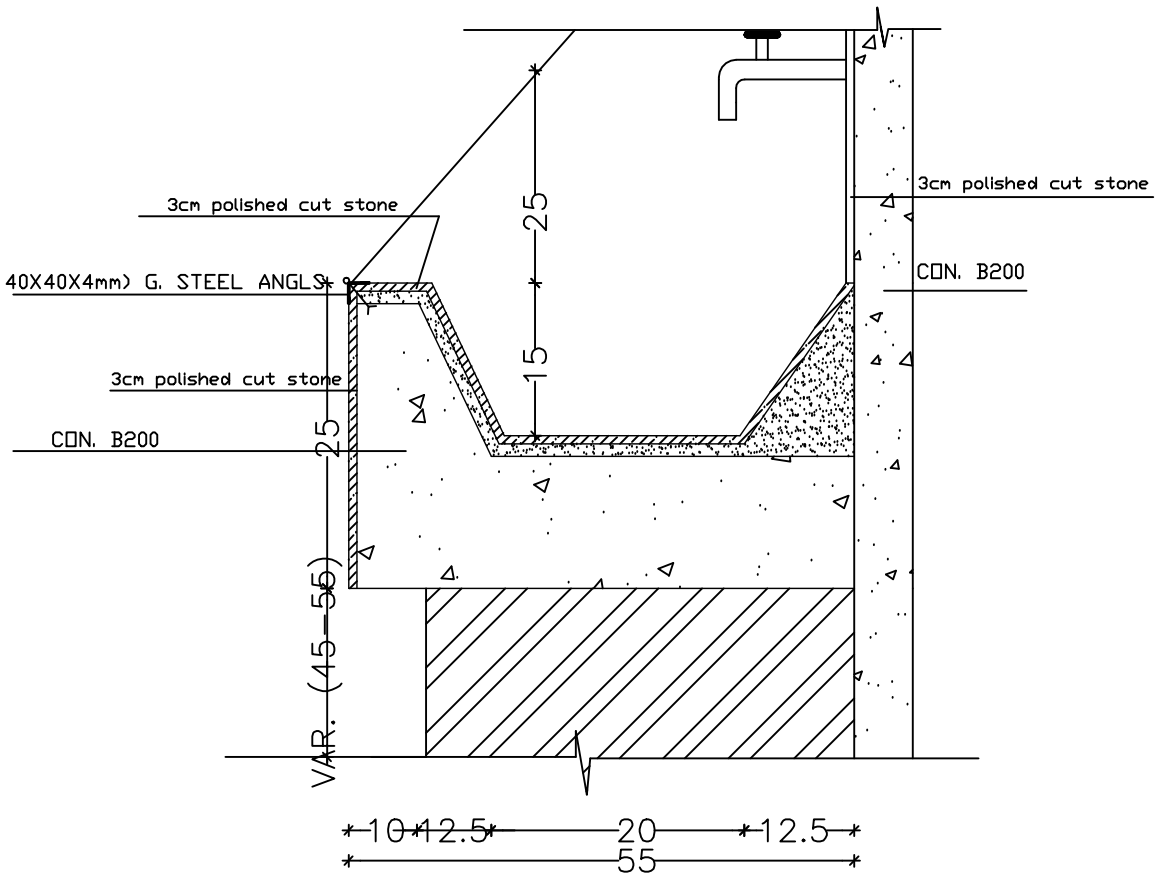

DETAIL A

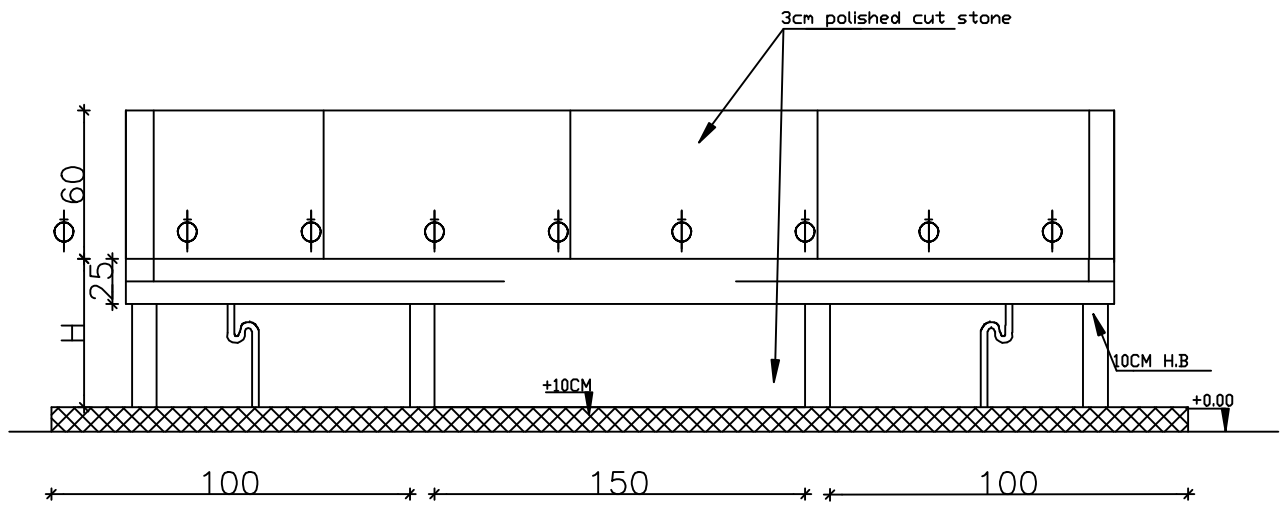

FRONT ELEVATION

DESIGNED BY	LUTFI ABU HASHISH		M2	DRAWING NO.	Dec 2022	DATE	ABU HASHISH ENGINEERING OFFICE	OFFICE
DESIGNED BY	LUTFI ABU HASHISH		1:100	SCALE	South Hebron area	VILLAGE	TOILET BLOCK	PROJECT
DRAFTMAN			FOUNTAIN PLAN			TITLE	SARA SECONDARY BOYS SCHOOL	OWNER