TIERKIDI EXISTING SITE PLAN

sc. 1:150

GENERAL NOTES:

LEGEND

A - OSS CENTER
B - STAFF TOILET
C - GUEST TOILET
D - WATER TANK SEAT
E - SEPTIC TANK
F - MAIN ROAD

Rev.:	Date:	Description:	Approved
	/ /		
	/ /		
	/ /		
	/ /		
	/ /		
	/ /		
	/ /		
	/ /		
	/ /		
	/ /		
	/ /		
	/ /		
0	/ /		

KEY PLAN

All information in this document is the property of UNOPS and cannot be copied anywhere but in this project without prior written consent of UNOPS.

Funded By:	Partner:
United Nations Higher Commission for Refugees Office for the AU (UNHCR)	United Nations Higher Commission for Refugees Office for the AU (UNHCR)
Program:	Implemented By:
Rehabilitation of UNHCR One-Stop-Shop (OSS) Registration Model	UNOPS , ETHIOPIA OPERATIONAL HUB
Project Name:	Design:
TIERKIDI OSS CENTER	UNOPS ,ETHIOPIA OPERATIONAL HUB

Drawing Title:

EXISTING SITE PLAN

Designed by			Discipline:	Dr. No:	Tot. No:	Rev No:
MM			AR	01	16	R0
Drawn:	Checked:	Approved:	Size:	Scale:	Date:	Rev.:
MM	BM	SM	A1	1:150	02 / 05 /2021	0

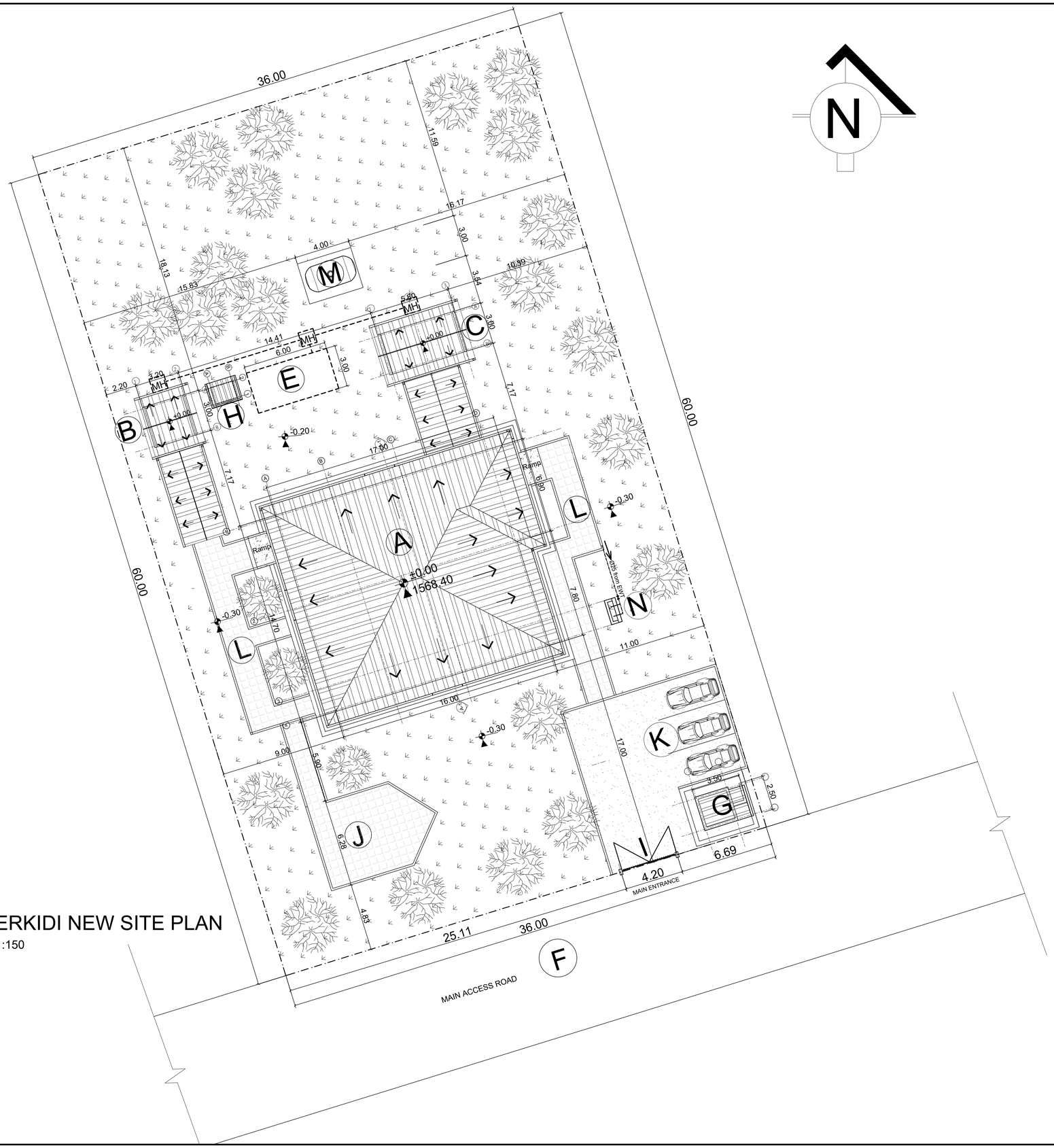

TIERKIDI NEW SITE PLAN

sc. 1:150

GENERAL NOTES:

LEGEND

EXISTING

A - OSS CENTER
B - STAFF TOILET
C - GUEST TOILET
D - WATER TANK SEAT
E - SEPTIC TANK
F - MAIN ROAD

NEW

G - GUARD POST
H - GENERATOR HOUSE
I - GATE
J - LANDSCAPE
K - PARKING
L - PAVED WALKWAY
M - WATER RESERVOIR
N - WATER POINTS

Rev.:	Date:	Description:	Approved
	/ /		
	/ /		
	/ /		
	/ /		
	/ /		
	/ /		
	/ /		
	/ /		
	/ /		
	/ /		
	/ /		
0	/ /		

KEY PLAN

All information in this document is the property of UNOPS and cannot be copied anywhere but in this project without prior written consent of UNOPS.

Funded By:	Partner:
United Nations Higher Commission for Refugees Office for the AU (UNHCR)	United Nations Higher Commission for Refugees Office for the AU (UNHCR)
Program:	Implemented By:
Rehabilitation of UNHCR One-Stop-Shop (OSS) Registration Model	UNOPS , ETHIOPIA OPERATIONAL HUB
Project Name:	Design:
TIERKIDI OSS CENTER	UNOPS ,ETHIOPIA OPERATIONAL HUB

Drawing Title:

PROPOSED SITE PLAN

Designed by	Discipline:	Dr. No:	Tot. No:	Rev No:
MM	AR	02	16	R0

Drawn:	Checked:	Approved:	Size:	Scale:	Date:	Rev.:
MM	BM	SM	A1	1:150	02 / 05 /2021	0

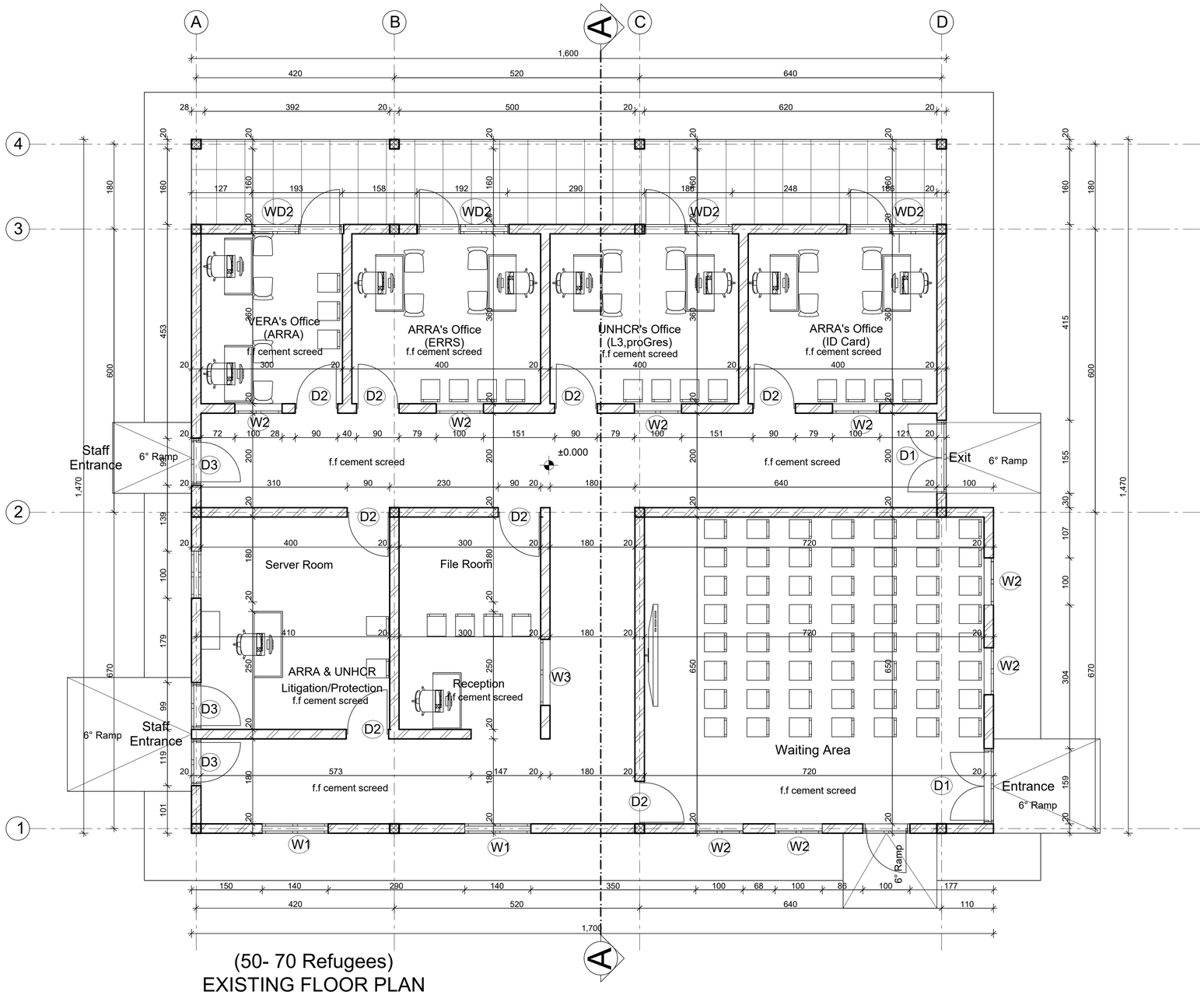

(50- 70 Refugees)
EXISTING FLOOR PLAN
SC 1;50

GENERAL NOTES:

Rev.:	Date:	Description:	Approved
0	/ /		

KEY PLAN

All information in this document is the property of UNOPS and cannot be copied anywhere but in this project without prior written consent of UNOPS.

Funded By:	Partner:
United Nations Higher Commission for Refugees Office for the AU (UNHCR)	United Nations Higher Commission for Refugees Office for the AU (UNHCR)
Program:	Implemented By:
Rehabilitation of UNHCR One-Stop-Shop (OSS) Registration Model	UNOPS ,ETHIOPIA OPERATIONAL HUB
Project Name:	Design:
TIERKIDI OSS CENTER	UNOPS ,ETHIOPIA OPERATIONAL HUB

Drawing Title:

EXISTING FLOOR PLAN - REGISTRATION MODEL

Designed by	Discipline:	Dr. No:	Tot. No:	Rev No:
MM	AR	03	16	R0

Drawn:	Checked:	Approved:	Size:	Scale:	Date:	Rev.:
MM	BM	SM	A1	1:50	02 / 05 /2021	0

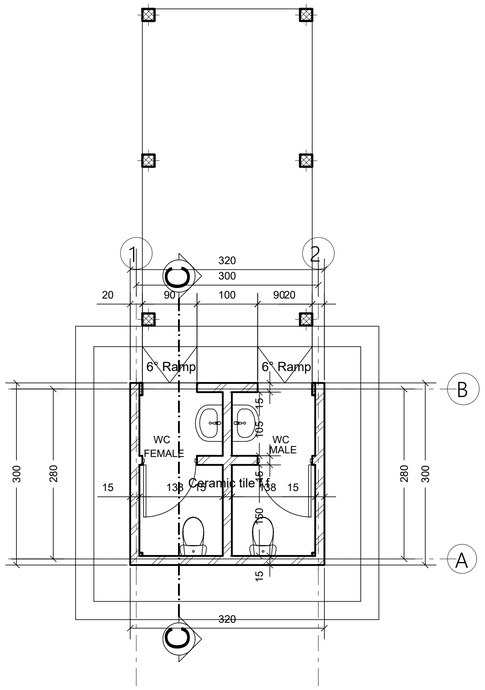

Ground Floor Plan
sc. 1:50 (Staff Toilet)

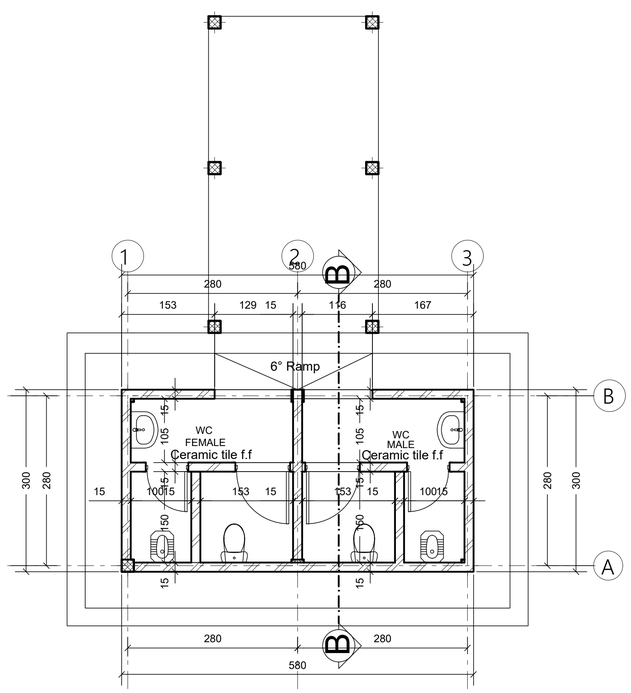

Ground Floor Plan
sc. 1:50 (Guest Toilet)

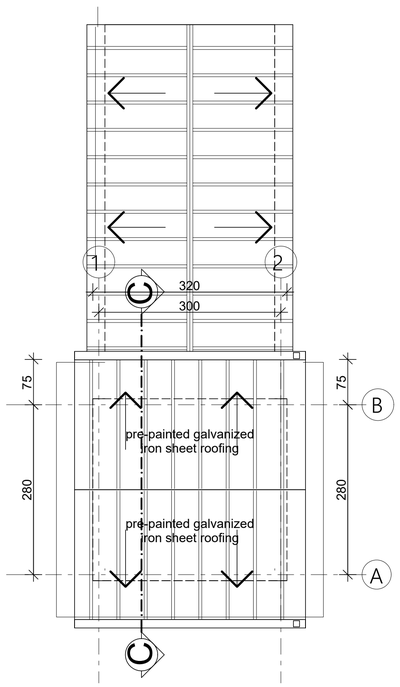

ROOF PLAN(Staff Toilet)
SC 1;50

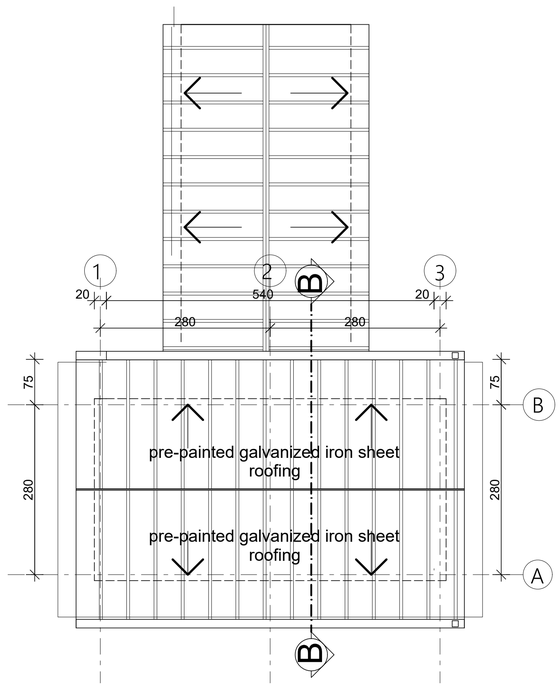

ROOF PLAN (Guest Toilet)
SC 1;50

GENERAL NOTES:

Rev.:	Date:	Description:	Approved
0	/ /		

KEY PLAN

All information in this document is the property of UNOPS and cannot be copied anywhere but in this project without prior written consent of UNOPS.

Funded By:	Partner:
United Nations Higher Commission for Refugees Office for the AU (UNHCR)	United Nations Higher Commission for Refugees Office for the AU (UNHCR)
Program:	Implemented By:
Rehabilitation of UNHCR One-Stop-Shop (OSS) Registration Model	UNOPS ,ETHIOPIA OPERATIONAL HUB
Project Name:	Design:
TIERKIDI OSS CENTER	UNOPS ,ETHIOPIA OPERATIONAL HUB

Drawing Title:

EXISTING TOILET'S FLOOR PLAN
(STAFF & GUEST TOILETS)

Designed by			Discipline:	Dr. No:	Tot. No:	Rev No:
MM			AR	04	16	R0
Drawn:	Checked:	Approved:	Size:	Scale:	Date:	Rev.:
MM	BM	SM	A1	1:50	02 / 05 /2021	0

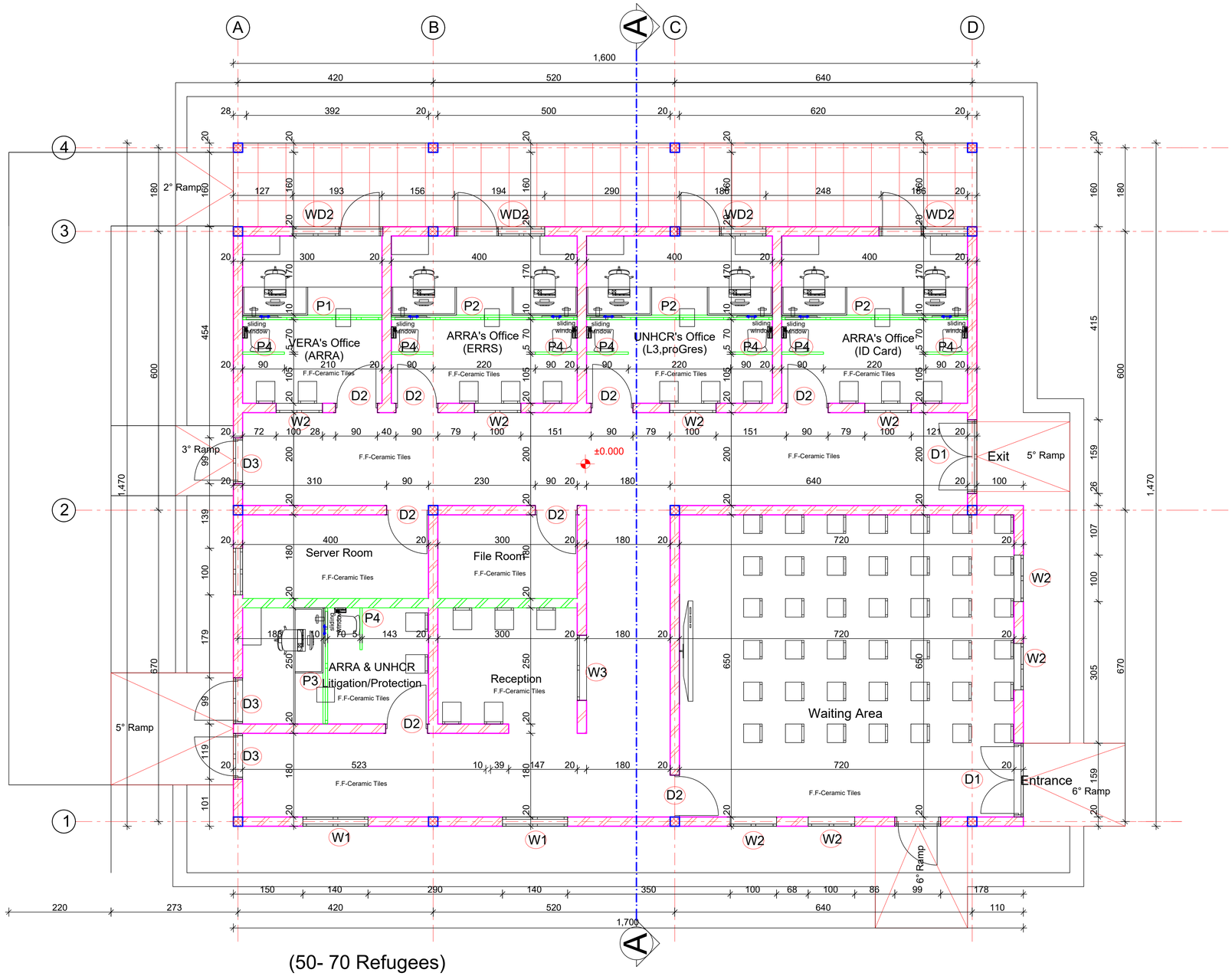

(50- 70 Refugees)
PROPOSED FLOOR PLAN
SC 1;50

GENERAL NOTES:

LEGEND

NEW PARTITION

EXISTING WALL

Note:
Replace all existing door and windows
New Metal Partition Wall
Emergency Door (D3) to be opened outwards

Rev.:	Date:	Description:	Approved
0	/ /		

KEY PLAN

All information in this document is the property of UNOPS and cannot be copied anywhere but in this project without prior written consent of UNOPS.

Funded By:	Partner:
United Nations Higher Commission for Refugees Office for the AU (UNHCR)	United Nations Higher Commission for Refugees Office for the AU (UNHCR)
Program:	Implemented By:
Rehabilitation of UNHCR One-Stop-Shop (OSS) Registration Model	UNOPS ,ETHIOPIA OPERATIONAL HUB
Project Name:	Design:
TIERKIDI OSS CENTER	UNOPS ,ETHIOPIA OPERATIONAL HUB

Drawing Title:

PROPOSED GROUND FLOOR PLAN - REGISTRATION MODEL

Designed by			Discipline:	Dr. No:	Tot. No:	Rev No:
MM			AR	05	16	R0
Drawn:	Checked:	Approved:	Size:	Scale:	Date:	Rev.:
MM	BM	SM	A1	1:50	02 / 05 /2021	0

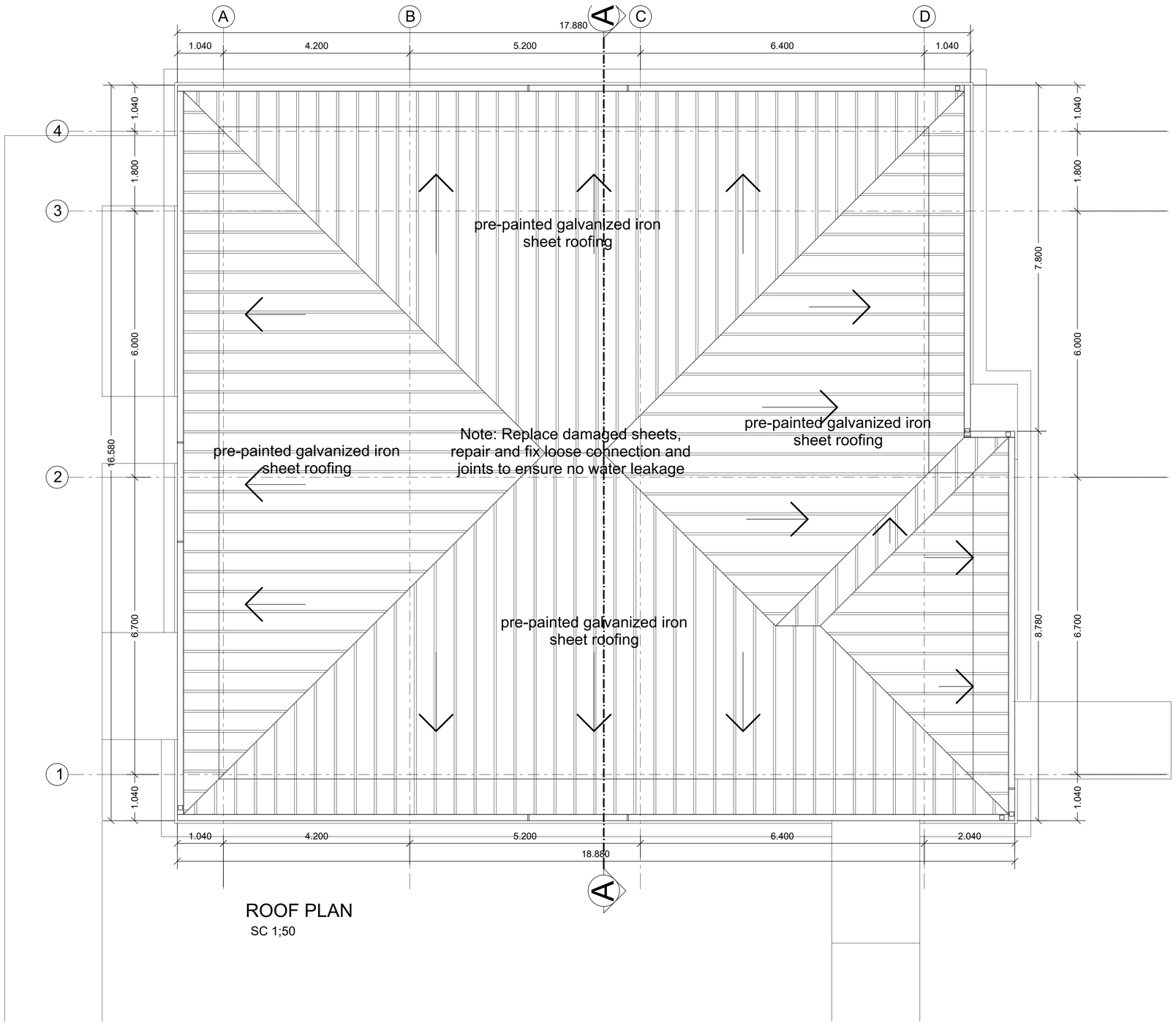

ROOF PLAN
SC 1;50

GENERAL NOTES:

Note:
Replace damaged Sheets, 10% of the total roofing area
Fix loose connections and joints and paint to match.
Ensure no water leakage via roofing system
Repaint the entire metal roofing sheet

Rev.:	Date:	Description:	Approved
	/ /		
	/ /		
	/ /		
	/ /		
	/ /		
	/ /		
	/ /		
	/ /		
	/ /		
	/ /		
	/ /		
0	/ /		

KEY PLAN

All information in this document is the property of UNOPS and cannot be copied anywhere but in this project without prior written consent of UNOPS.

Funded By:	Partner:
United Nations Higher Commission for Refugees Office for the AU (UNHCR)	United Nations Higher Commission for Refugees Office for the AU (UNHCR)
Program:	Implemented By:
Rehabilitation of UNHCR One-Stop-Shop (OSS) Registration Model	UNOPS , ETHIOPIA OPERATIONAL HUB
Project Name:	Design:
TIERKIDI OSS CENTER	UNOPS ,ETHIOPIA OPERATIONAL HUB

Drawing Title:

ROOF PLAN - REGISTRATION MODEL

Designed by			Discipline:	Dr. No:	Tot. No:	Rev No:
MM			AR	06	16	R0
Drawn:	Checked:	Approved:	Size:	Scale:	Date:	Rev.:
MM	BM	SM	A1	1:50	02 / 05 /2021	0

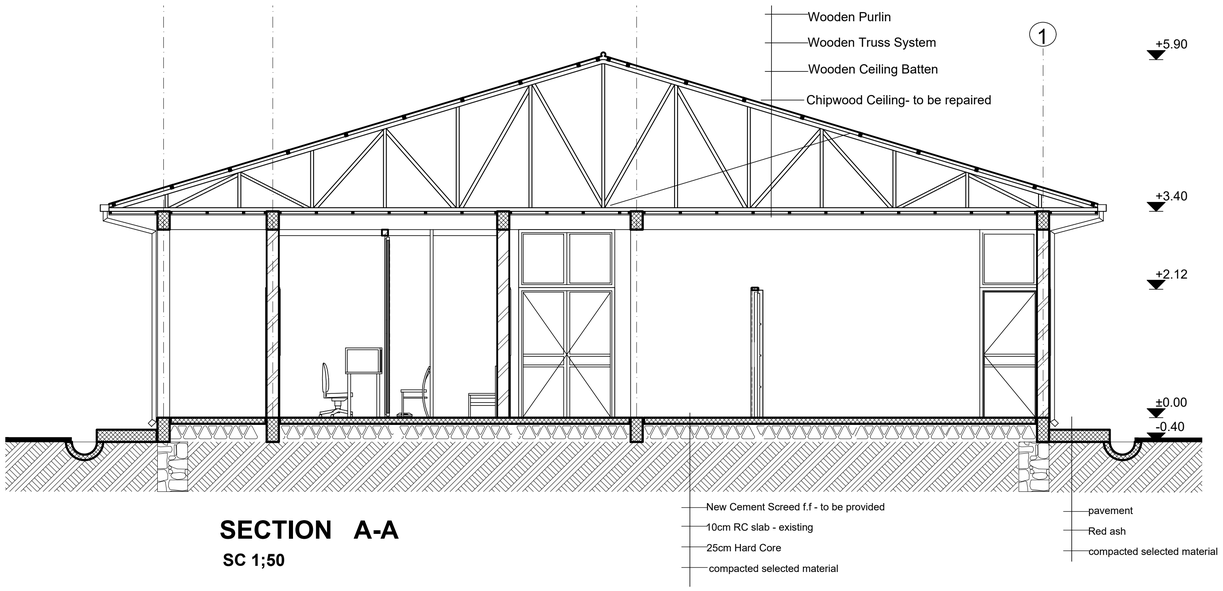

SECTION A-A

SC 1;50

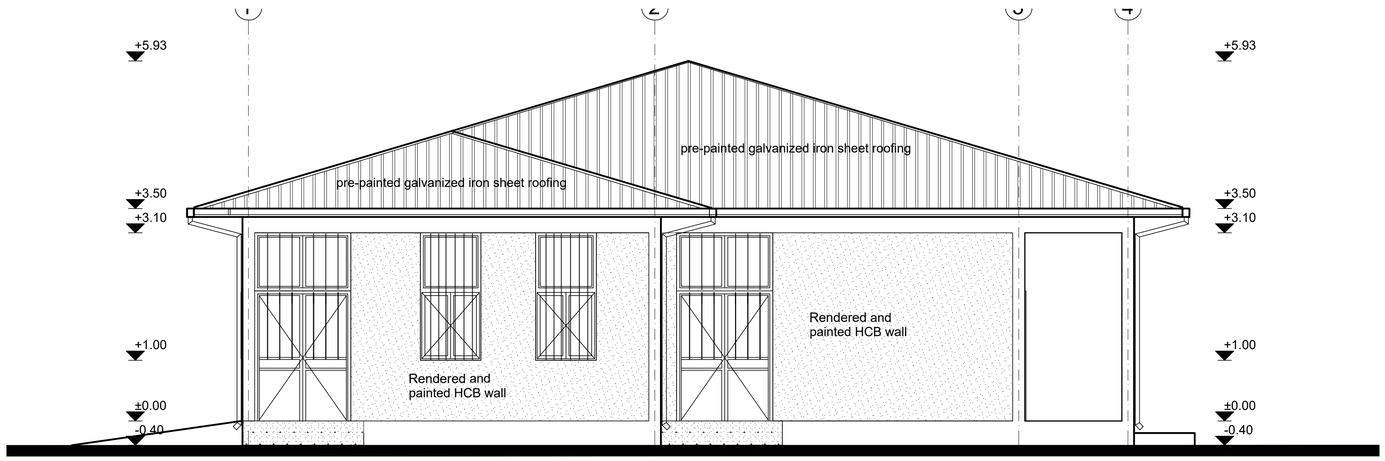

FRONT ELEVATION

SC 1;50

GENERAL NOTES:

Note:

1) Replace damaged roof sheets, 10% of the total area
   Fix loose connections and joints and paint to match.
   Ensure no water leakage via roofing system
2) Chipwood - damaged part to be replaced-
   75% of the total ceiling area
   loose connections and uneven surface to be fixed
   and entire ceiling surface to be painted:
3) Interior & Exterior Walls -
   Patch and repair defective plaster (20% of total surface)
   and entire wall surface to be repainted.
4) Floor Finish:
   Provide new non-slippery ceramic floor tiles

Rev.:	Date:	Description:	Approved
	/ /		
	/ /		
	/ /		
	/ /		
	/ /		
	/ /		
	/ /		
	/ /		
	/ /		
	/ /		
	/ /		
0	/ /		

KEY PLAN

All information in this document is the property of UNOPS and cannot be copied anywhere but in this project without prior written consent of UNOPS.

Funded By:	Partner:
United Nations Higher Commission for Refugees Office for the AU (UNHCR)	United Nations Higher Commission for Refugees Office for the AU (UNHCR)
Program:	Implemented By:
Rehabilitation of UNHCR One-Stop-Shop (OSS) Registration Model	UNOPS ,ETHIOPIA OPERATIONAL HUB
Project Name:	Design:
TIERKIDI OSS CENTER	UNOPS ,ETHIOPIA OPERATIONAL HUB

Drawing Title:

SECTION & ELEVATION - REGISTRATION MODEL

Designed by	Discipline:	Dr. No:	Tot. No:	Rev No:
MM	AR	07	16	R0

Drawn:	Checked:	Approved:	Size:	Scale:	Date:	Rev.:
MM	BM	SM	A1	1:50	02 / 05 /2021	0

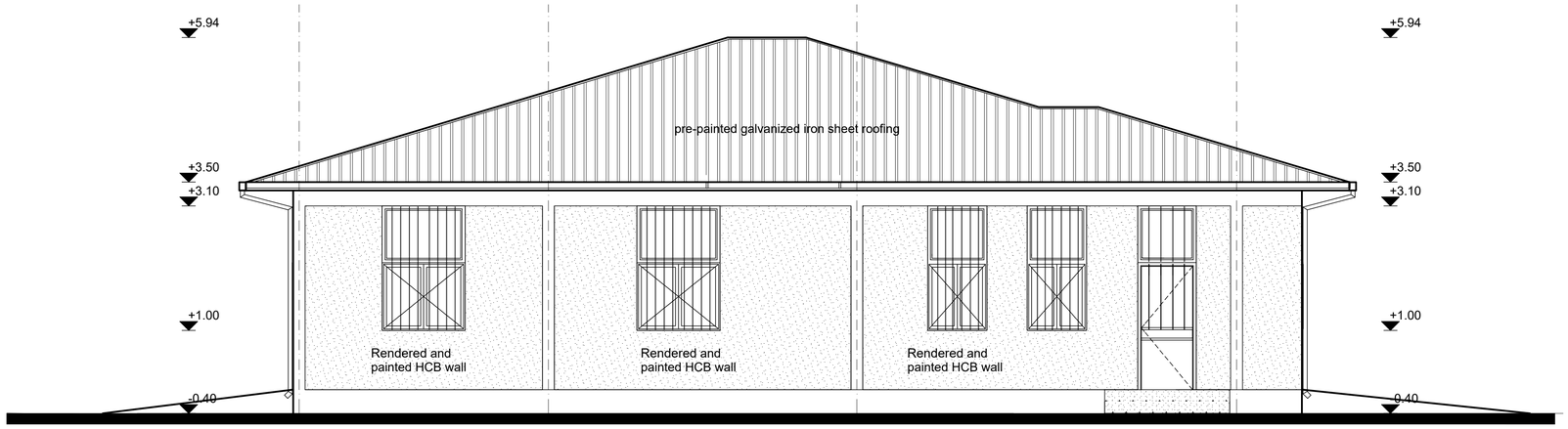

LEFT SIDE ELEVATION
SC 1;50

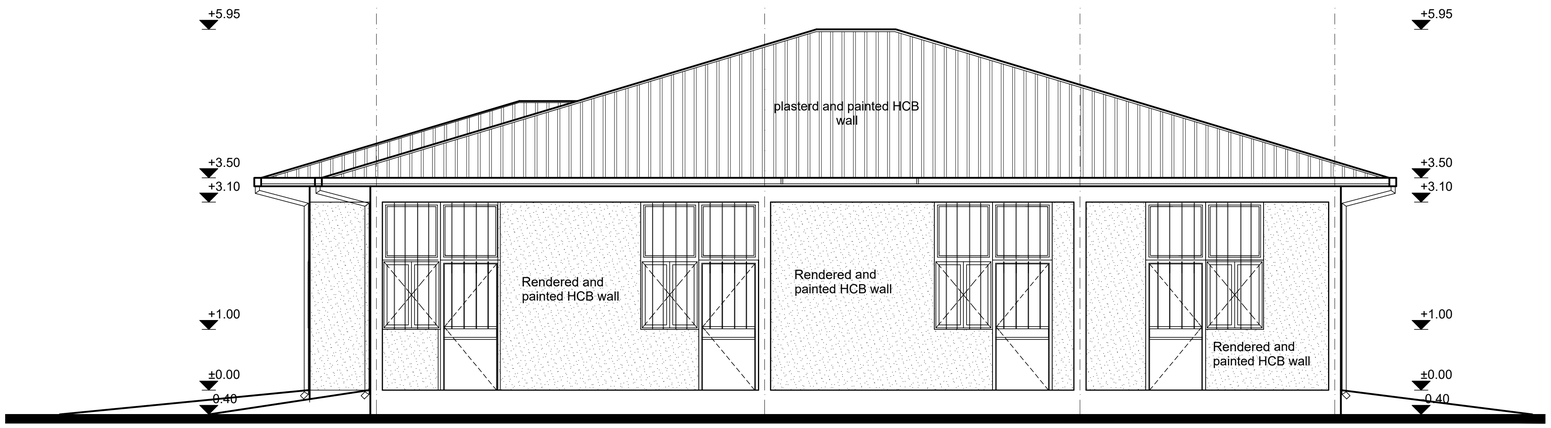

RIGHT SIDE ELEVATION
SC 1;50

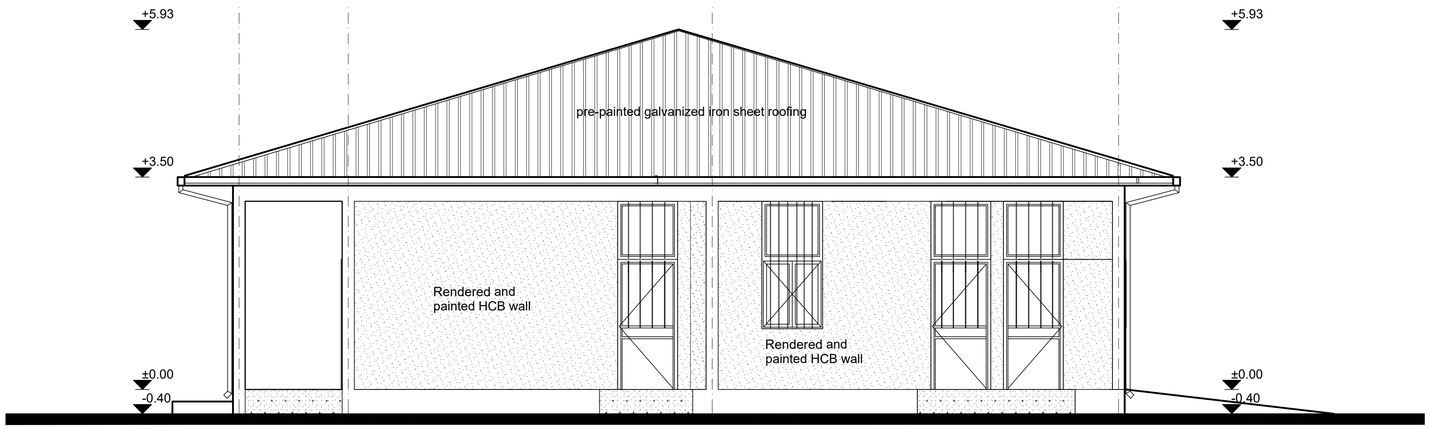

REAR ELEVATION
SC 1;50

GENERAL NOTES:

Note:

1) Replace damaged roof sheets, 10% of the total area
Fix loose connections and joints and paint to match.
Ensure no water leakage via roofing system
2) Chipwood - damaged part to be replaced-
75% of the total ceiling area
loose connections and uneven surface to be fixed
and entire ceiling surface to be painted:
3) Interior & Exterior Walls -
Patch and repair defective plaster (20% of total surface)
and entire wall surface to be repainted.
4) Floor Finish:
Provide new non-slippery ceramic floor tiles

Rev.:	Date:	Description:	Approved
	/ /		
	/ /		
	/ /		
	/ /		
	/ /		
	/ /		
	/ /		
	/ /		
	/ /		
	/ /		
	/ /		
0	/ /		

KEY PLAN

All information in this document is the property of UNOPS and cannot be copied anywhere but in this project without prior written consent of UNOPS.

Funded By:	Partner:
United Nations Higher Commission for Refugees Office for the AU (UNHCR)	United Nations Higher Commission for Refugees Office for the AU (UNHCR)
Program:	Implemented By:
Rehabilitation of UNHCR One-Stop-Shop (OSS) Registration Model	UNOPS ,ETHIOPIA OPERATIONAL HUB
Project Name:	Design:
TIERKIDI OSS CENTER	UNOPS ,ETHIOPIA OPERATIONAL HUB

Drawing Title:

ELEVATION- REGISTRATION MODEL

Designed by			Discipline:	Dr. No:	Tot. No:	Rev No:
MM			AR	08	16	R0
Drawn:	Checked:	Approved:	Size:	Scale:	Date:	Rev.:
MM	BM	SM	A1	1:50	02 / 05 /2021	0

PARTITION SCHEDULE

Window Name	P1	P2	P3	P4
Quantity	1	3	1	8
Type				
Frame material	Aluminium frame extruded profiles of standard UNI 3870 - ICS 77.140.90	Aluminium frame extruded profiles of standard UNI 3870 - ICS 77.140.90	Aluminium frame extruded profiles of standard UNI 3870 - ICS 77.140.90	Wooden frame with wooden mouldings all round
Frame finish	Brushed natural Aluminium Surface	Brushed natural Aluminium Surface	Brushed natural Aluminium Surface	Plastic emulsion paint.
Glazing	5mm thick clear glass	5mm thick clear glass	5mm thick clear glass	Solid, 40mm oke veneered plywood
Front View	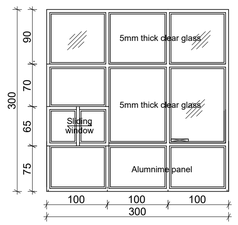	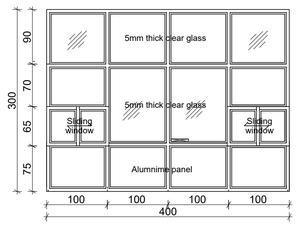	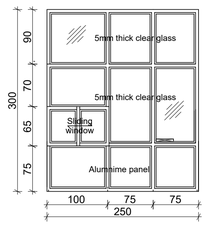	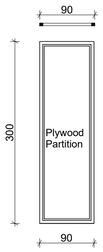

WINDOW DOOR SCHEDULE

Door Name	WD1
Quantity	4
Frame material	RHS steel frame 40mm x 40mm x 2mm
Frame finish	Painted with 2 coats of antirust paint & one coat of enamel paint
Door leaf construction	180D Opening, 0.5mm casement metal pane
Burglar Proofing	RHS 25mm x 25mm x 2mm Vertical steel bars at equal intervals welded to frames on the enterior side.
Ironmongry	stainless steel pull-push bar handle
Louver	0.5mm thick steel louvers at top welded to RHS frame. Louver to be covered with approved mosquito net.
	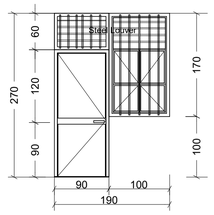

DOOR SCHEDULE

Door Name	D1	D2	D3
Quantity	2	8	4
Frame material	RHS steel frame 40mm x 40mm x 2mm	RHS steel frame 40mm x 40mm x 2mm	RHS steel frame 40mm x 40mm x 2mm
Frame finish	Painted with 2 coats of antirust paint & one coat of enamel paint	Painted with 2 coats of antirust paint & one coat of enamel paint	Painted with 2 coats of antirust paint & one coat of enamel paint
Door leaf construction	180D opening made of 0.5mm flat metal pane	180D opening made of 0.5mm flat metal pane	180D opening made of 0.5mm flat metal pane
Burglar Proofing	RHS 25X25X2 mm vertical steel bars at equal intervals welded to frames on the interior side	RHS 25X25X2 mm vertical steel bars at equal intervals welded to frames on the interior side	RHS 25X25X2 mm vertical steel bars at equal intervals welded to frames on the interior side
Ironmongry	stainless steel pull-push bar handle	stainless steel pull-push bar handle	stainless steel pull-push bar handle
Louver	0.5mm thick steel louvers welded at top to the frame. Louvers to be covered with approved mosquito net.	0.5mm thick steel louvers welded at top to the frame. Louvers to be covered with approved mosquito net.	0.5mm thick steel louvers welded at top to the frame. Louvers to be covered with approved mosquito net.
	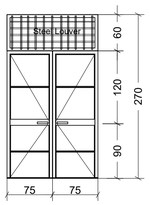	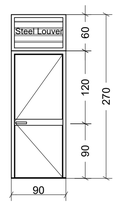	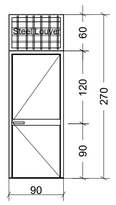

WINDOW SCHEDULE

Window Name	W1	W2
Quantity	3	8
Frame material	LTZ steel frame 40mm x 40mm x 2mm	LTZ steel frame 40mm x 40mm x 2mm
Frame finish	Painted with 2 coats of antirust paint & one coat of enamel paint	Painted with 2 coats of antirust paint & one coat of enamel paint
Glazing	5mm thick clear glass	5mm thick clear glass
Burglar proofing	RHS 25 X 25 X 2 mm steel bars wended to frames at equal spacing behind glazings on the interior side	RHS 25 X 25 X 2 mm steel bars wended to frames at equal spacing behind glazings on the interior side
Louver	0.5mm thick steel louvers welded to RHS frame. Louver to be covered with approved mosquito net.	0.5mm thick steel louvers welded to RHS frame. Louver to be covered with approved mosquito net.
Ironmongry	stainless steel pull-push bar handle	stainless steel pull-push bar handle
	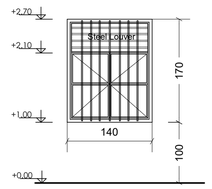	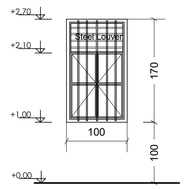

GENERAL NOTES:

Notes:

1) New Metal Partition Schedule
2) All Door and Windows to be removed and Replaced.

Rev.:	Date:	Description:	Approved
	/ /		
	/ /		
	/ /		
	/ /		
	/ /		
	/ /		
	/ /		
	/ /		
	/ /		
	/ /		
	/ /		
0	/ /		

KEY PLAN

All information in this document is the property of UNOPS and cannot be copied anywhere but in this project without prior written consent of UNOPS.

Funded By:	Partner:
United Nations Higher Commission for Refugees Office for the AU (UNHCR)	United Nations Higher Commission for Refugees Office for the AU (UNHCR)
Program:	Implemented By:
Rehabilitation of UNHCR One-Stop-Shop (OSS) Registration Model	UNOPS ,ETHIOPIA OPERATIONAL HUB
Project Name:	Design:
TIERKIDI OSS CENTER	UNOPS ,ETHIOPIA OPERATIONAL HUB

Drawing Title:

DOOR/WINDOW & METAL PARTITION SCHEDULES

Designed by	Discipline:	Dr. No:	Tot. No:	Rev No:
MM	AR	09	16	R0

Drawn:	Checked:	Approved:	Size:	Scale:	Date:	Rev.:
MM	BM	SM	A1	1:50	02 / 05 /2021	0

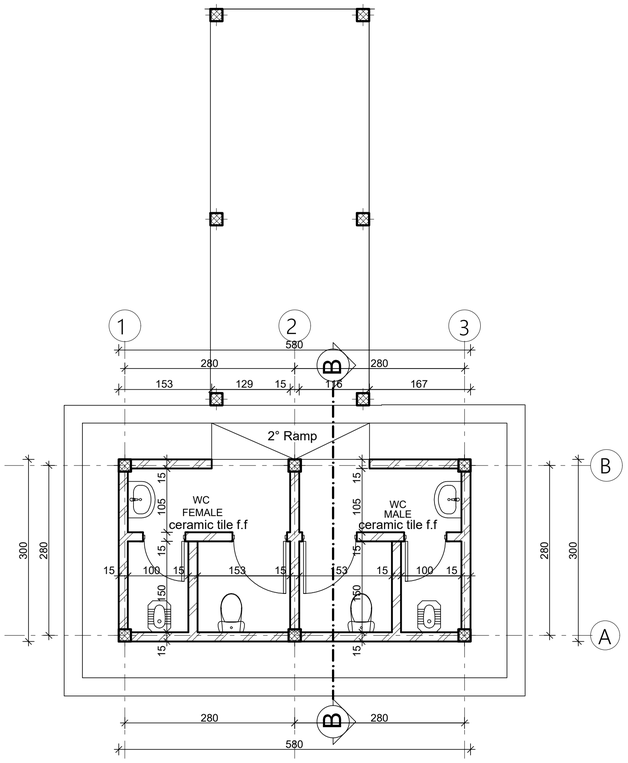

Ground Floor Plan
sc. 1:50 (Guest Toilet)

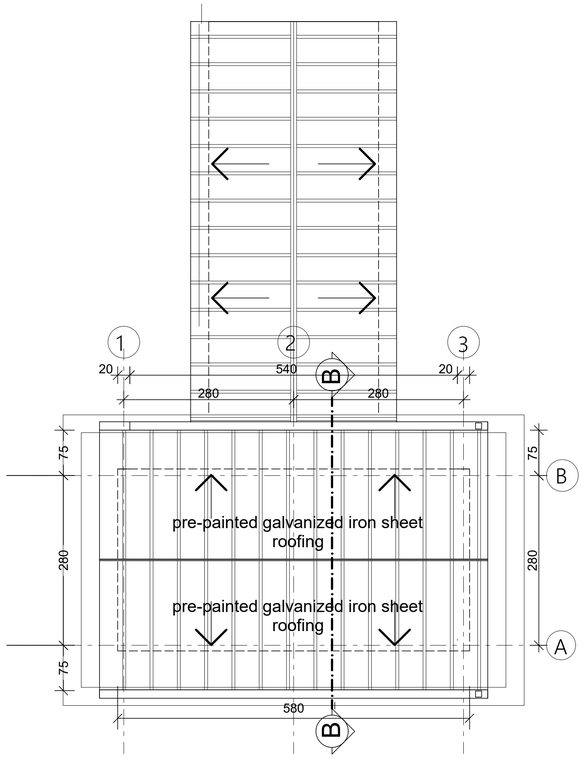

ROOF PLAN
SC 1;50 (Guest Toilet)

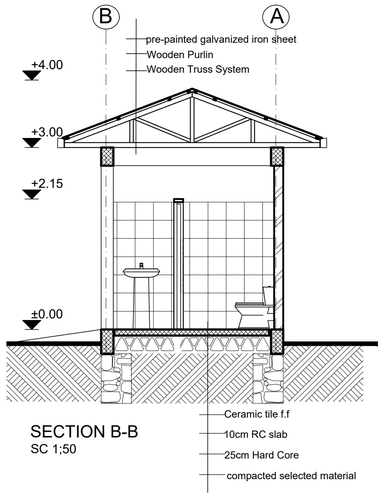

SECTION B-B
SC 1;50

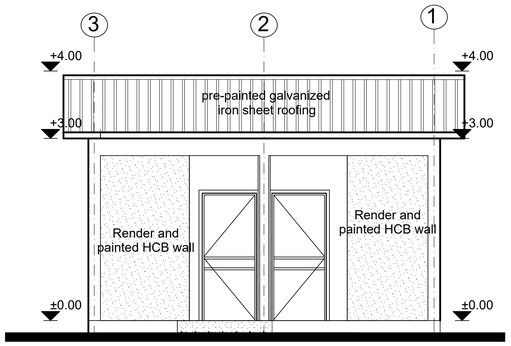

FRONT ELEVATION
SC 1;50

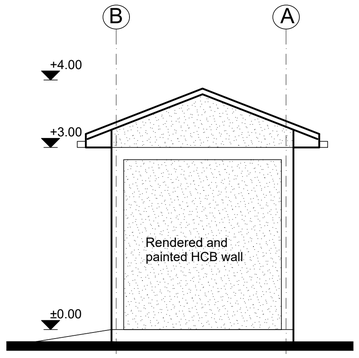

RIGHT SIDE ELEVATION
SC 1;50

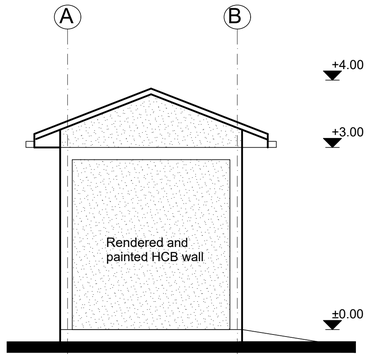

LEFT SIDE ELEVATION
SC 1;50

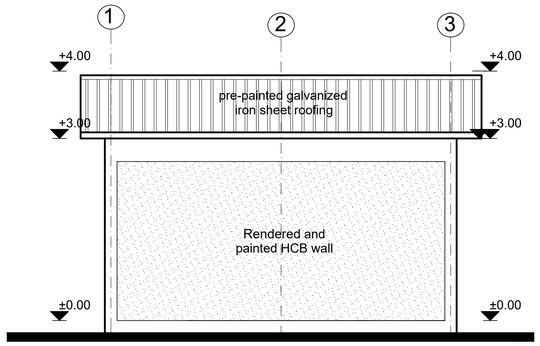

REAR ELEVATION
SC 1;50

GENERAL NOTES:

Note:
1) Interior & Exterior Walls -
Patch and repair defective plaster and repaint.
2) Floor & Wall Finish:
Replace damaged floor and wall ceramic tiles and harmonize with existing finish.

Rev.:	Date:	Description:	Approved
	/ /		
	/ /		
	/ /		
	/ /		
	/ /		
	/ /		
	/ /		
	/ /		
	/ /		
	/ /		
	/ /		
0	/ /		

KEY PLAN

All information in this document is the property of UNOPS and cannot be copied anywhere but in this project without prior written consent of UNOPS.

Funded By:	Partner:
United Nations Higher Commission for Refugees Office for the AU (UNHCR)	United Nations Higher Commission for Refugees Office for the AU (UNHCR)
Program:	Implemented By:
Rehabilitation of UNHCR One-Stop-Shop (OSS) Registration Model	UNOPS ,ETHIOPIA OPERATIONAL HUB
Project Name:	Design:
TIERKIDI OSS CENTER	UNOPS ,ETHIOPIA OPERATIONAL HUB

Drawing Title:

GUEST TOILET PLANS

Designed by	Discipline:	Dr. No:	Tot. No:	Rev No:
MM	AR	10	16	R0

Drawn:	Checked:	Approved:	Size:	Scale:	Date:	Rev.:
MM	BM	SM	A1	1:50	02 / 05 /2021	0

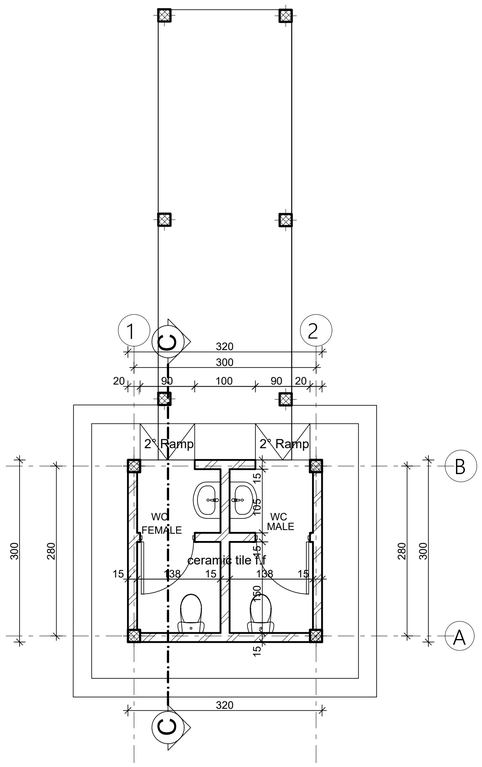

Ground Floor Plan
sc. 1:50 (Staff Toilet)

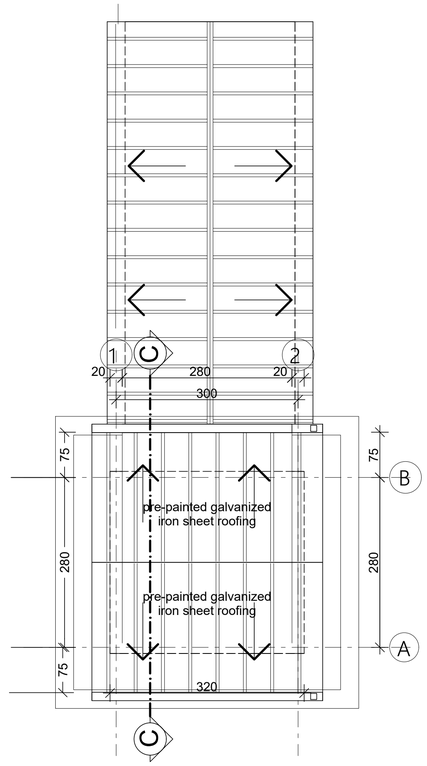

ROOF PLAN
SC 1;50 (Staff Toilet)

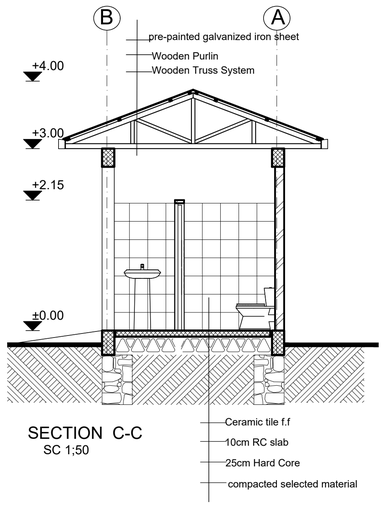

SECTION C-C
SC 1;50

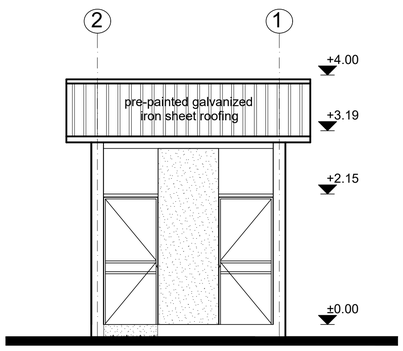

FRONT ELEVATION
SC 1;50

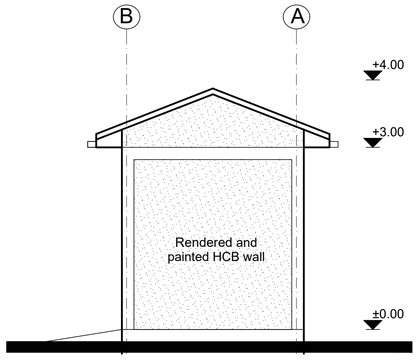

RIGHT SIDE ELEVATION
SC 1;50

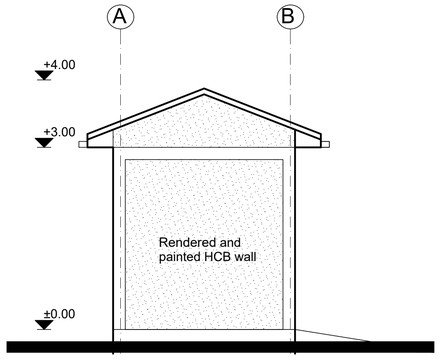

LEFT SIDE ELEVATION
SC 1;50

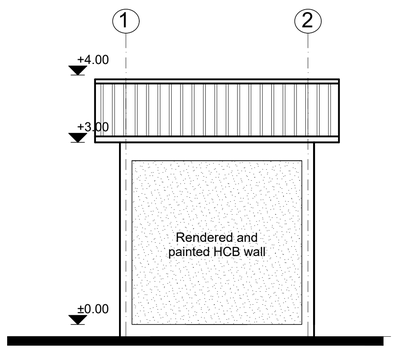

REAR ELEVATION
SC 1;50

GENERAL NOTES:

Note:
1) Interior & Exterior Walls -
Patch and repair defective plaster and repaint.
2) Floor & Wall Finish:
Replace damaged floor and wall ceramic tiles and harmonize with existing finish.

Rev.:	Date:	Description:	Approved
	/ /		
	/ /		
	/ /		
	/ /		
	/ /		
	/ /		
	/ /		
	/ /		
	/ /		
	/ /		
	/ /		
0	/ /		

KEY PLAN

All information in this document is the property of UNOPS and cannot be copied anywhere but in this project without prior written consent of UNOPS.

Funded By:	Partner:
United Nations Higher Commission for Refugees Office for the AU (UNHCR)	United Nations Higher Commission for Refugees Office for the AU (UNHCR)
Program:	Implemented By:
Rehabilitation of UNHCR One-Stop-Shop (OSS) Registration Model	UNOPS ,ETHIOPIA OPERATIONAL HUB
Project Name:	Design:
TIERKIDI OSS CENTER	UNOPS ,ETHIOPIA OPERATIONAL HUB

Drawing Title:

STAFF TOILET PLANS

Designed by			Discipline:	Dr. No:	Tot. No:	Rev No:
MM			AR	11	16	R0
Drawn:	Checked:	Approved:	Size:	Scale:	Date:	Rev.:
MM	BM	SM	A1	1:50	02 / 05 /2021	0

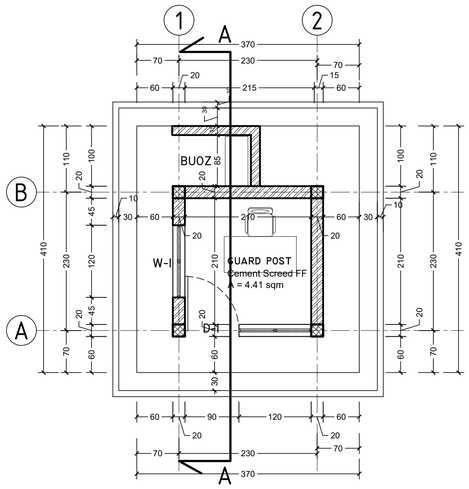

GROUND FLOOR PLAN
SC I:50

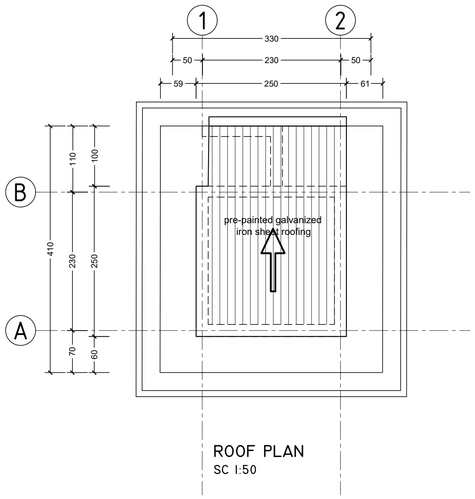

ROOF PLAN
SC I:50

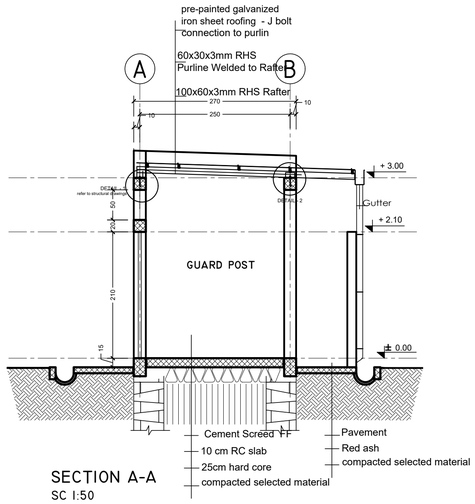

SECTION A-A
SC I:50

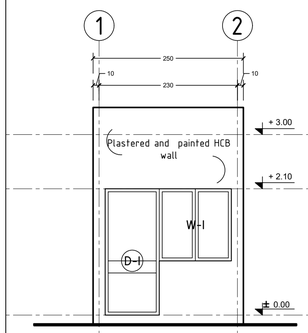

FRONT ELEVATION
SC I:50

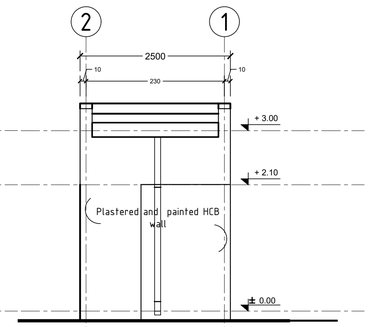

REAR ELEVATION
SC I:50

WINDOWS AND DOOR SCHEDULE
SC I:50

	D-I	W-I
PLAN VIEW		
ELEVATION VIEW	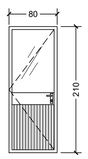	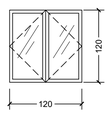
PIECES	1 pcs	2 pcs
OPENING DIRECTION	LEFT - Inward 1, Outward 0 RIGHT - Inward 0, Outward 0	double pane inward opening
DESCRIPTION	2.5mm thick metal LTZ profile frame with corrugated metal sheet bottom panel	2.5mm thick metal LTZ profile frame.
GLAZING	4mm thick transluent and non reflective glass	4mm thick clear and non reflective glass

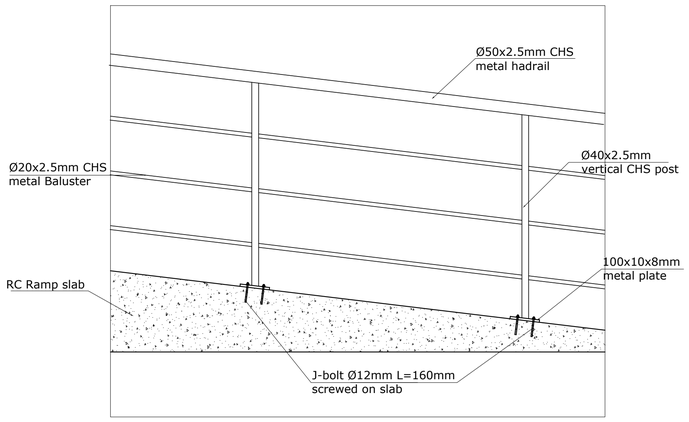

TYPICAL RAMP HANDRAIL DETAIL

Scale 1:20

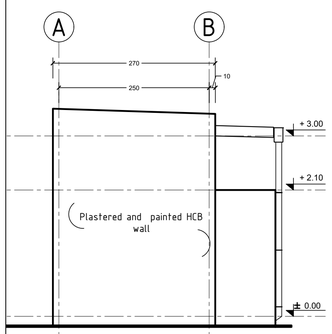

RIGHT SIDE ELEVATION
SC I:50

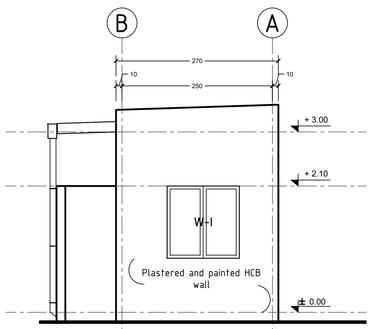

LEFT SIDE ELEVATION
SC I:50

FINISHING SCHEDULE
SC I:50

ROOM	AREA	FLOOR FINISH	WALL FINISH	CEILING FINISH
GUARD POST	4.41 sqm	50mm thick cement screed	plastered and painted HCB wall	Open ceiling to roof structure

GENERAL NOTES:

Rev.:	Date:	Description:	Approved
	/ /		
	/ /		
	/ /		
	/ /		
	/ /		
	/ /		
	/ /		
	/ /		
	/ /		
	/ /		
	/ /		
	/ /		

KEY PLAN

All information in this document is the property of UNOPS and cannot be copied anywhere but in this project without prior written consent of UNOPS.

Funded By: United Nations Higher Commission for Refugees Office for the AU (UNHCR)

Partner: United Nations Higher Commission for Refugees Office for the AU (UNHCR)

Program: Rehabilitation of UNHCR One-Stop-Shop (OSS) REGISTRATION MODEL

Implemented By: UNOPS , ETHIOPIA OPERATIONAL HUB

Project Name: TIERKIDI OSS CENTER

Design: UNOPS ,ETHIOPIA OPERATIONAL HUB

Drawing Title: PROPOSED GUARD POST BLOCK

Designed by	Discipline:	Dr. No:	Tot. No:	Rev No:
MM	AR	12	16	R0

Drawn:	Checked:	Approved:	Size:	Scale:	Date:	Rev.:
MM	BM	SM	A1	1:50	02/ 05 / 2021	0

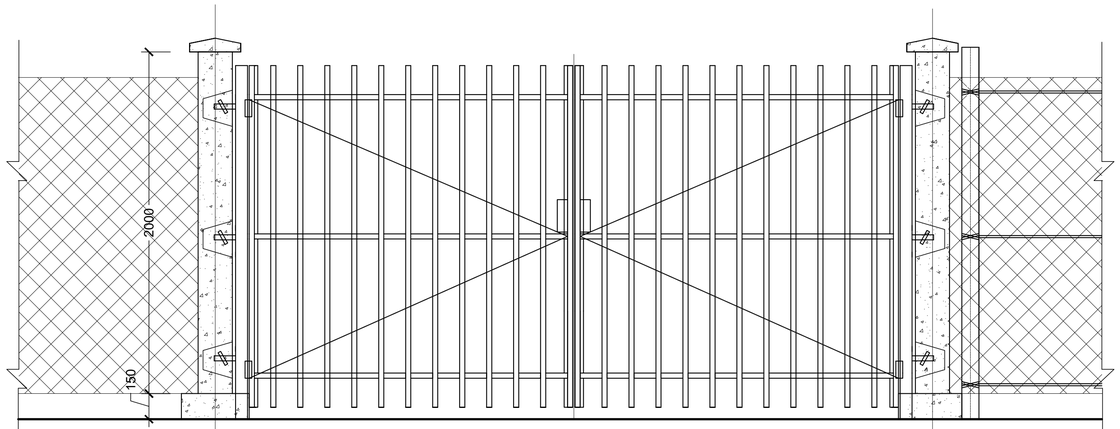

ENTRANCE GATE ELEVATION
SC 1/25

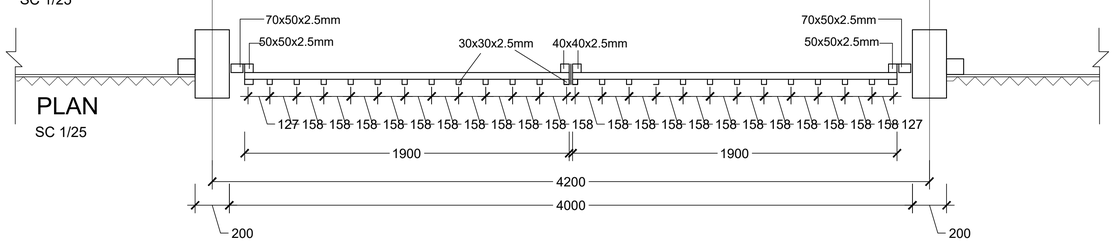

PLAN
SC 1/25

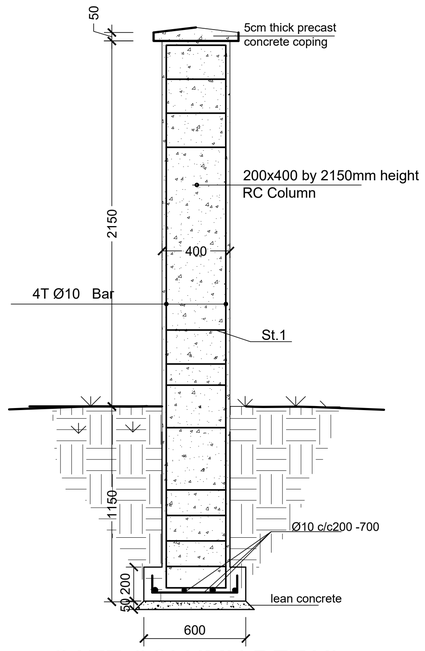

GATE COLUMN DETAIL
SC 1/25

FOUNDATION DETAIL

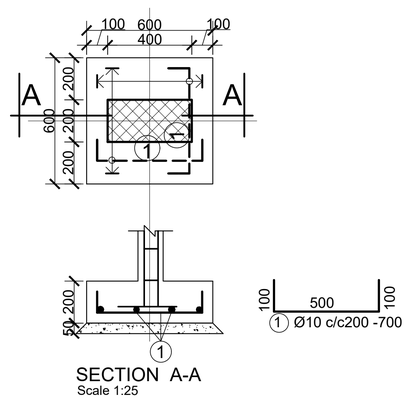

SECTION A-A
Scale 1:25

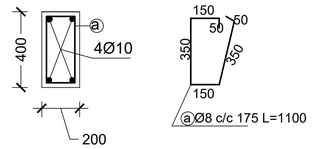

TYPICAL COLUMN SECTION
SCALE 1:25

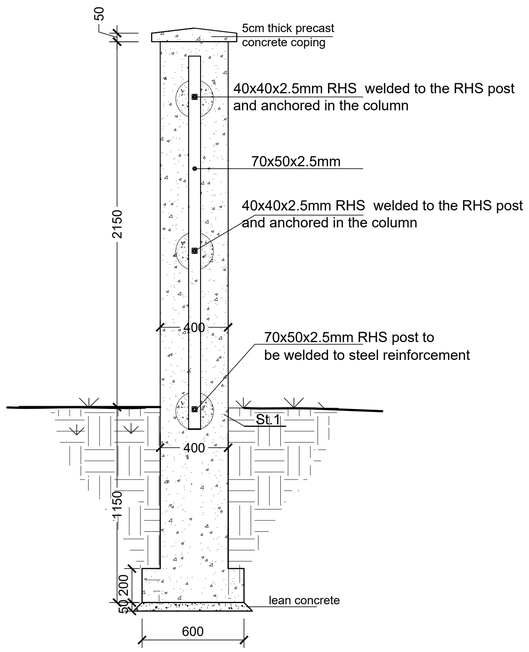

GATE POST DETAIL
SC 1/25

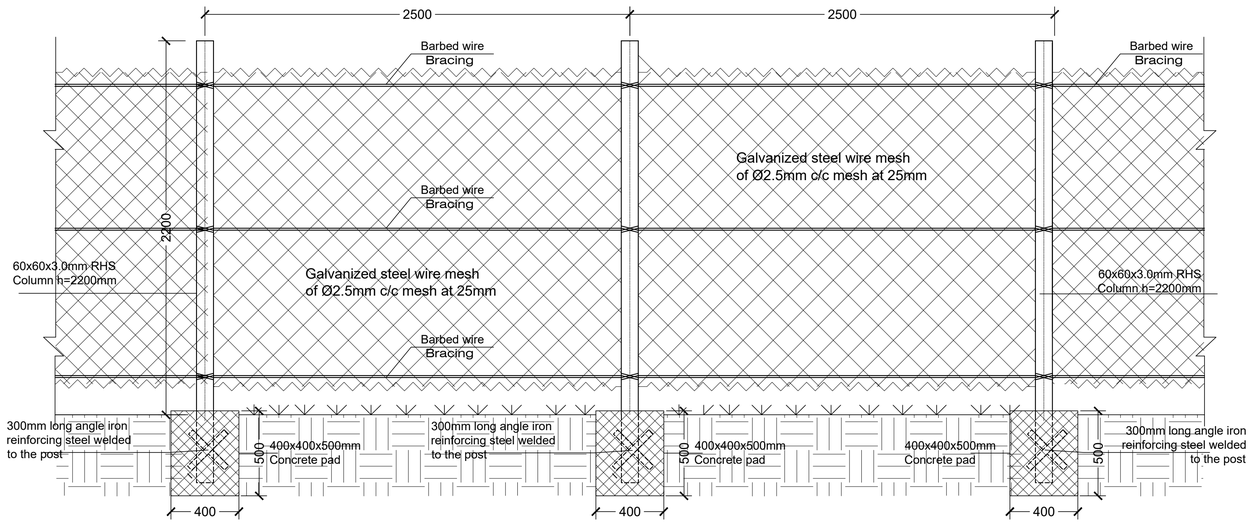

FENCE PARTIAL ELEVATION
SC 1/25

GENERAL NOTES:

Note:
New Gate
New Fence

Rev.:	Date:	Description:	Approved
	/ /		
	/ /		
	/ /		
	/ /		
	/ /		
	/ /		
	/ /		
	/ /		
	/ /		
	/ /		
	/ /		
	/ /		
0	/ /		

KEY PLAN

All information in this document is the property of UNOPS and cannot be copied anywhere but in this project without prior written consent of UNOPS.

Funded By:	Partner:
United Nations Higher Commission for Refugees Office for the AU (UNHCR)	United Nations Higher Commission for Refugees Office for the AU (UNHCR)
Program:	Implemented By:
Rehabilitation of UNHCR One-Stop-Shop (OSS) Registration Model	UNOPS , ETHIOPIA OPERATIONAL HUB
Project Name:	Design:
TIERKIDI OSS CENTER	UNOPS ,ETHIOPIA OPERATIONAL HUB UNOPS

Drawing Title:

GATE & FENCE DETAILS

Designed by			Discipline:	Dr. No:	Tot. No:	Rev No:
MM			AR	13	16	R0
Drawn:	Checked:	Approved:	Size:	Scale:	Date:	Rev.:
MM	BM	SM	A1	1:50	02 / 05 /2021	0

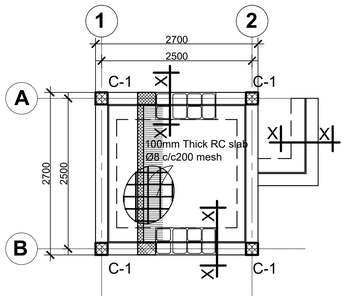

GROUND FLOOR SLAB REINFORCEMENT ,
BEAM AND COLUMN LAYOUT
(slab thickens =100mm)

SCALE 1:50

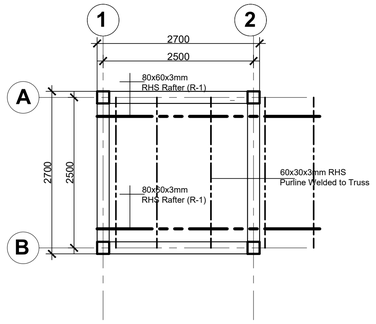

ROOF BEAM AND TRUSS LAYOUT

SCALE 1:50

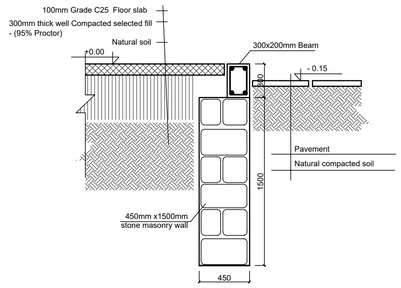

TYPICAL MASONRY WALL SECTION X-X

SCALE 1:25

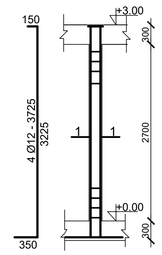

COLUMN C-1

SCALE 1:50

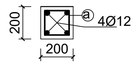

SECTION 1-1

SCALE 1:25

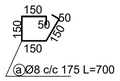

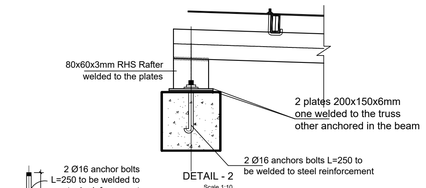

DETAIL - 2

Scale 1:10

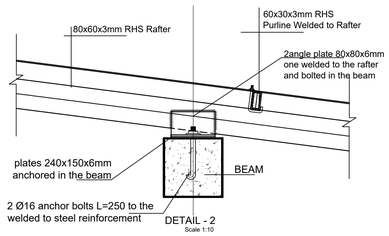

DETAIL - 2

Scale 1:10

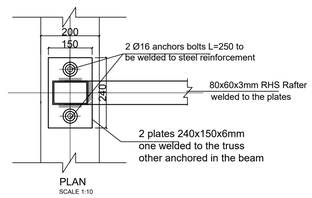

PLAN

SCALE 1:10

DETAIL - 1

SCALE 1:10

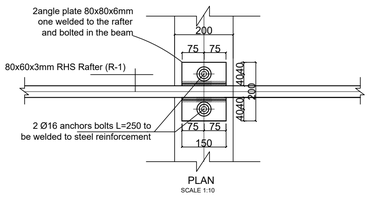

PLAN

SCALE 1:10

DETAIL - 2

SCALE 1:10

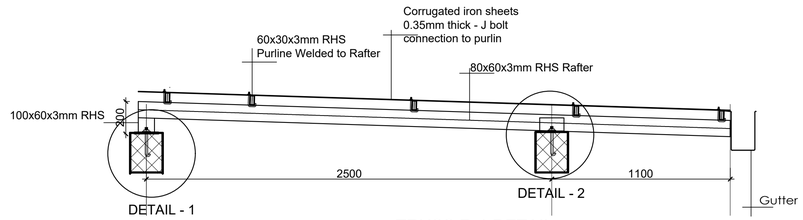

DETAIL - 1

DETAIL - 2

TRUSS R-1 DETAIL

SC:1.25

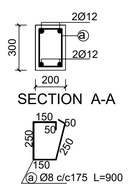

SECTION A-A

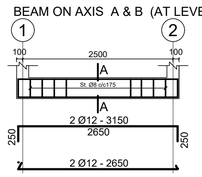

BEAM ON AXIS A & B (AT LEVEL +0.00)

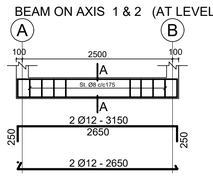

BEAM ON AXIS 1 & 2 (AT LEVEL +0.00)

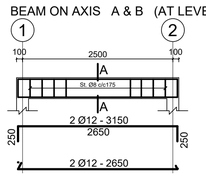

BEAM ON AXIS A & B (AT LEVEL +3.00)

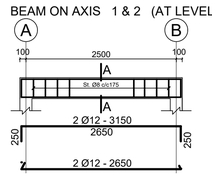

BEAM ON AXIS 1 & 2 (AT LEVEL +3.00)

GENERAL NOTES:

Rev.:	Date:	Description:	Approved
	/ /		
	/ /		
	/ /		
	/ /		
	/ /		
	/ /		
	/ /		
	/ /		
	/ /		
	/ /		
	/ /		
	/ /		

KEY PLAN

All information in this document is the property of UNOPS and cannot be copied anywhere but in this project without prior written consent of UNOPS.

Funded By:	Partner:
United Nations Higher Commission for Refugees Office for the AU (UNHCR)	United Nations Higher Commission for Refugees Office for the AU (UNHCR)
Program:	Implemented By:
Rehabilitation of UNHCR One-Stop-Shop (OSS) REGISTRATION MODEL	UNOPS , ETHIOPIA OPERATIONAL HUB
Project Name:	Design:
TIERKIDI OSS CENTER	UNOPS ,ETHIOPIA OPERATIONAL HUB

Drawing Title:

GUARD POST DETAILS

Designed by	Discipline:	Dr. No:	Tot. No:	Rev No:
MM	ST	14	16	R0

Drawn:	Checked:	Approved:	Size:	Scale:	Date:	Rev.:
MM	BM	SM	A1	1:50 ,1:25	02/ 05 / 2021	0

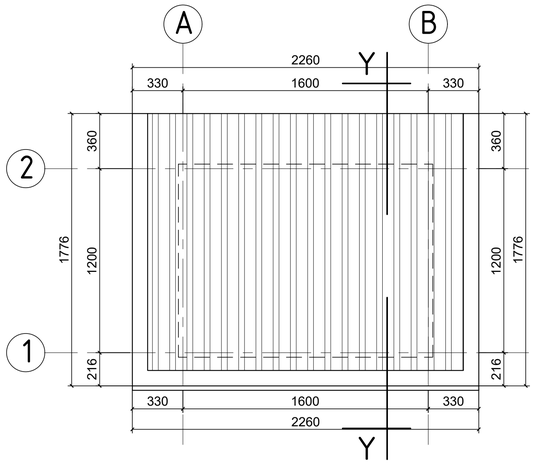

GENERATOR HOUSE ROOF PLAN
SC 1:20

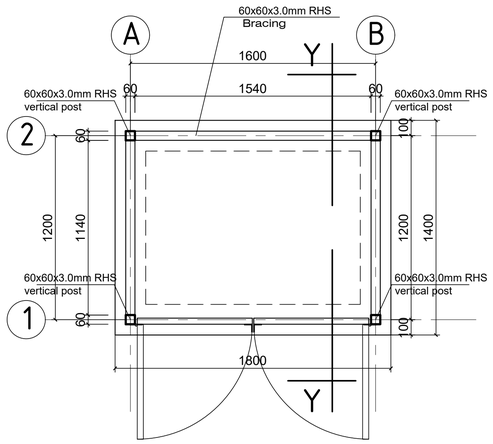

GENERATOR HOUSE FLOOR PLAN
SC 1:20

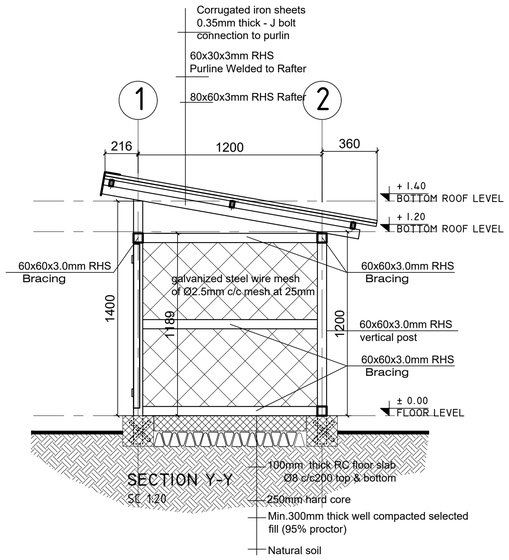

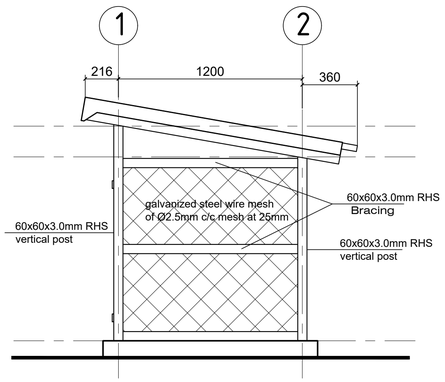

RIGHT SIDE ELEVATION
SC 1:20

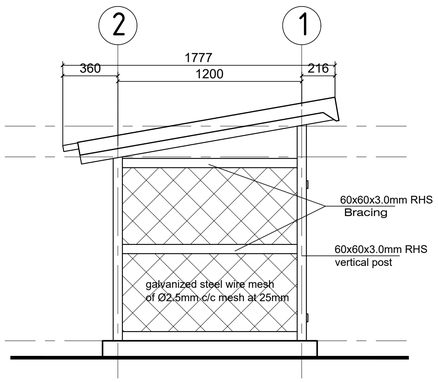

LEFT SIDE ELEVATION
SC 1:20

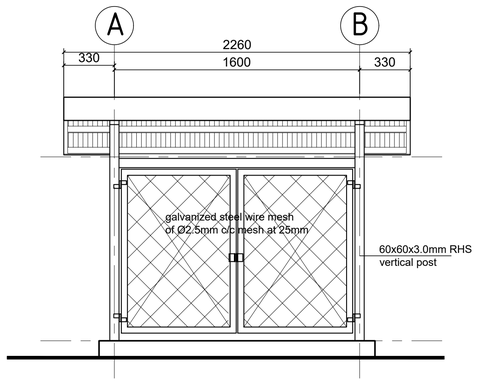

FRONT ELEVATION
SC 1:20

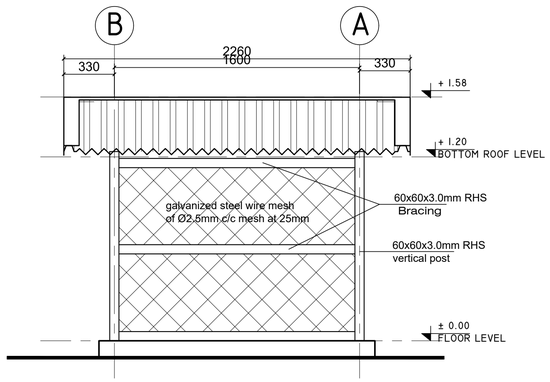

REAR ELEVATION
SC 1:20

GENERAL NOTES:

Rev.:	Date:	Description:	Approved
	/ /		
	/ /		
	/ /		
	/ /		
	/ /		
	/ /		
	/ /		
	/ /		
	/ /		
	/ /		
	/ /		
0	/ /		

KEY PLAN

All information in this document is the property of UNOPS and cannot be copied anywhere but in this project without prior written consent of UNOPS.

Funded By:	Partner:
United Nations Higher Commission for Refugees Office for the AU (UNHCR)	United Nations Higher Commission for Refugees Office for the AU (UNHCR)
Program:	Implemented By:
Rehabilitation of UNHCR One-Stop-Shop (OSS) Registration Model	UNOPS , ETHIOPIA OPERATIONAL HUB
Project Name:	Design:
TIERKIDI OSS CENTER	UNOPS ,ETHIOPIA OPERATIONAL HUB

Drawing Title:

GENERATOR HOUSE

Designed by			Discipline:	Dr. No:	Tot. No:	Rev No:
MM			AR	15	16	R0
Drawn:	Checked:	Approved:	Size:	Scale:	Date:	Rev.:
MM	BM	SM	A1	1:20	02 /05 /2021	0

TYPICAL MASONRY WALL PLINTH FOR WATER TANK

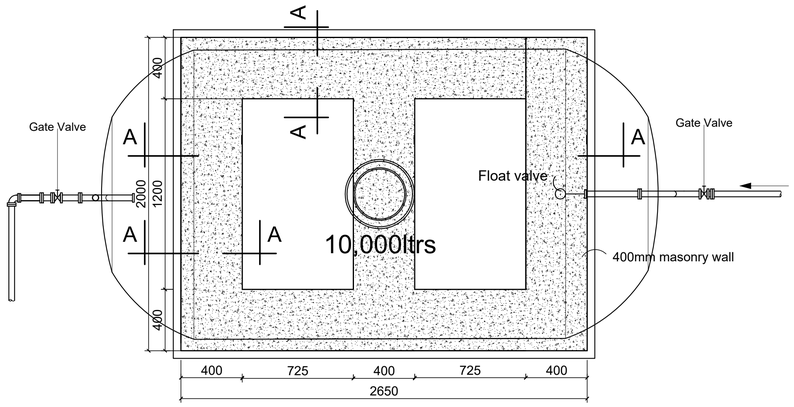

WATER RESERVOIR PLAN
SCALE -1:25

WATER TANKER SUPPORT DETAILS

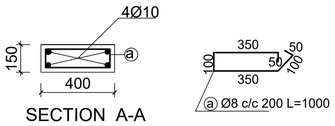

SECTION A-A
SCALE 1:25

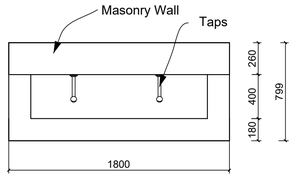

HAND WASH PLAN
Scale 1:25

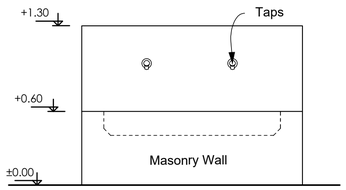

FRONT ELEVATION
Scale 1:25

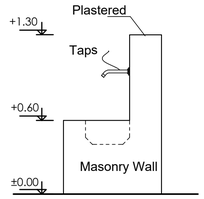

SIDE ELEVATION
Scale 1:25

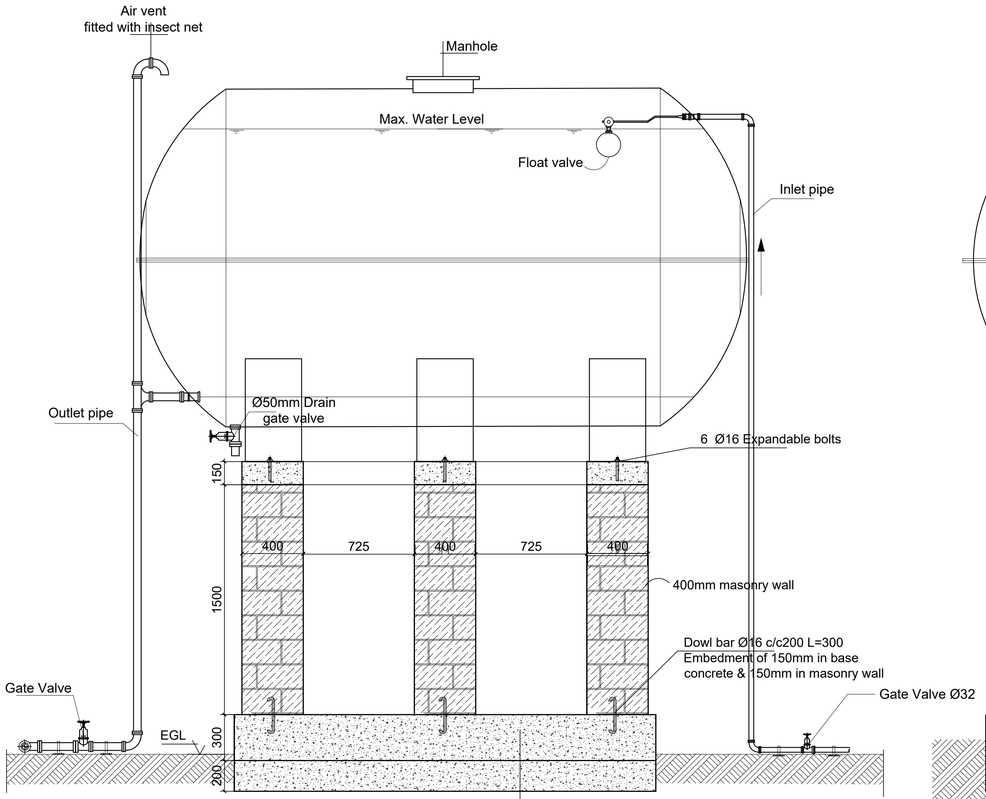

SECTION A-A
SCALE -1:25

WATER TANK PLINTH
SCALE -1:25

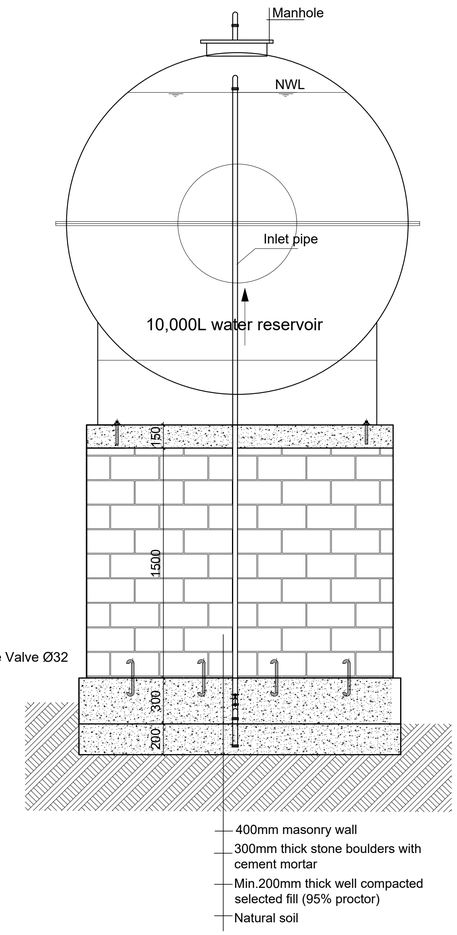

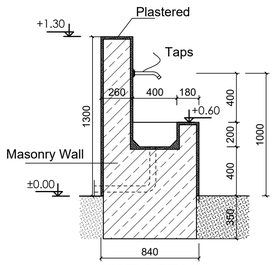

HWT DETAIL
Scale 1:25

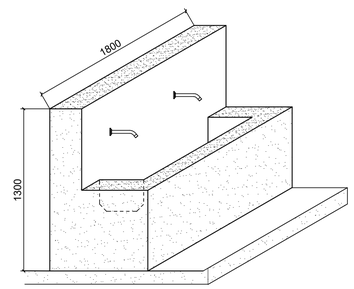

HAND WASH TROUGH (HWT) PERSPECTIVE VIEW
Scale 1:25

GENERAL NOTES:

K - WATER RESERVOIR

Rev.:	Date:	Description:	Approved
0	/ /		

KEY PLAN

All information in this document is the property of UNOPS and cannot be copied anywhere but in this project without prior written consent of UNOPS.

Funded By:	Partner:
United Nations Higher Commission for Refugees Office for the AU (UNHCR)	United Nations Higher Commission for Refugees Office for the AU (UNHCR)
Program:	Implemented By:
Rehabilitation of UNHCR One-Stop-Shop (OSS) Registration Model	UNOPS , ETHIOPIA OPERATIONAL HUB
Project Name:	Design:
TIERKIDI OSS CENTER	UNOPS ,ETHIOPIA OPERATIONAL HUB

Drawing Title:

WATER RESERVOIR PLAN
HAND WASH TROUGH DETAILS

Designed by			Discipline:	Dr. No:	Tot. No:	Rev No:
MM			AR	16	16	R0
Drawn:	Checked:	Approved:	Size:	Scale:	Date:	Rev.:
MM	BM	SM	A1	1:25	02 / 05 /2021	0

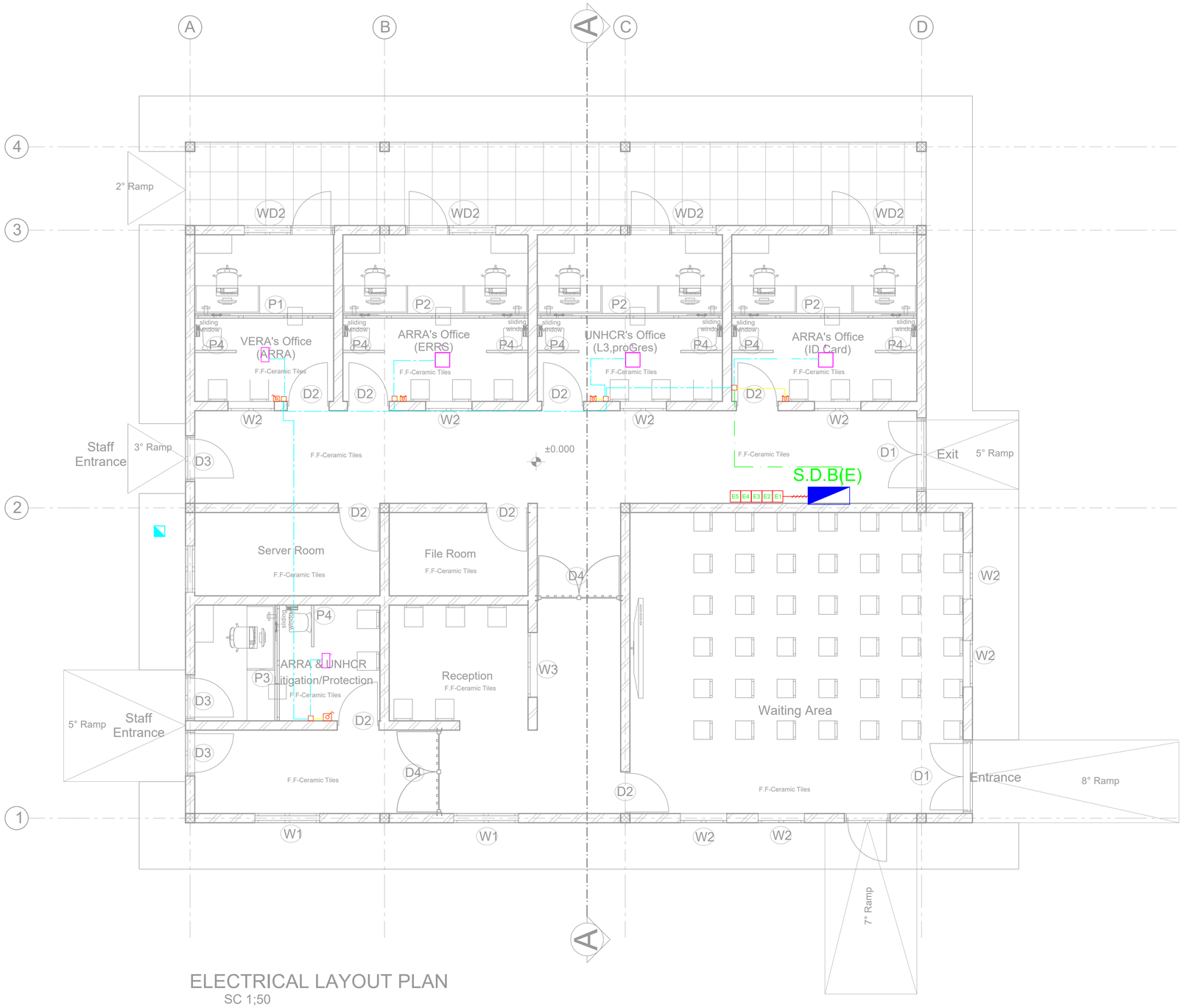

ELECTRICAL LAYOUT PLAN

SC 1;50

GENERAL NOTES:

LEGEND

NEW PARTITION

EXISTING WALL

LEGEND INDOOR LIGHTING

SYMBOL	REFERENCE	DESCRIPTION / MOUNTING METHODS	FLUX
	1	Luminaire for to the ceiling Florescent linear T5 ⌀ 26 mm – 2x36 watts, Surface equipment	2700Lm
	2	Luminaire ⌀ 30 cm Florescent linear T5 ⌀ 26 mm – 1x18w, IP40 Surface equipment	5400Lm

ELECTRICAL ACCESSORIES

SYMBOL	DESCRIPTION / MOUNTING METHODS
	Wall Installation
	One way switch | One way switch, surface mounting
	Double pole switch | Double pole switch, surface mounting
	Junction box, surface mounting
	Junction box, flush mounting
	Switch box, flush mounting
	Fan Speed Control

CABLES LEGEND

SYMBOL	DESCRIPTION / MOUNTING METHOD
	Cable installed in conduit in the ground
	Cable installed on perforated tray run horizontally
	Cable installed in conduit on surface mounting with cable clips
	Switchboard - Mains Power Supply
	Electrical 400x400x400

GENERAL NOTES

- The implementation of the different components should be aligned by the contractor in the implementation phase, with the elements of the architectural project;
- The dimensions are given as an indication, the contractor must confirm them in place and perform precise measurements before the work is done;
- All dimensions must be confirmed with the architectural project;
- All work must be done with particular care in order not to damage the pre-existing installation, to ensure the safety of the building and the workers;

Rev.:	Date:	Description:	Approved
0	/ /		

KEY PLAN

All information in this document is the property of UNOPS and cannot be copied anywhere but in this project without prior written consent of UNOPS.

Funded By:	Partner:
United Nations Higher Commission for Refugees Office for the AU (UNHCR)	United Nations Higher Commission for Refugees Office for the AU (UNHCR)
Program:	Implemented By:
Rehabilitation of UNHCR One-Stop-Shop (OSS) Registration Model	UNOPS ,ETHIOPIA OPERATIONAL HUB
Project Name:	Design:
Tierkidi OSS Center	UNOPS ,ETHIOPIA OPERATIONAL HUB

Drawing Title:

LIGHTING

Designed by	Discipline:	Dr. No:	Tot. No:	Rev No:
YG	EL	01	05	R0

Drawn:	Checked:	Approved:	Size:	Scale:	Date:	Rev.:
MA	YG		A1	1:50	02 / 10 /2021	0

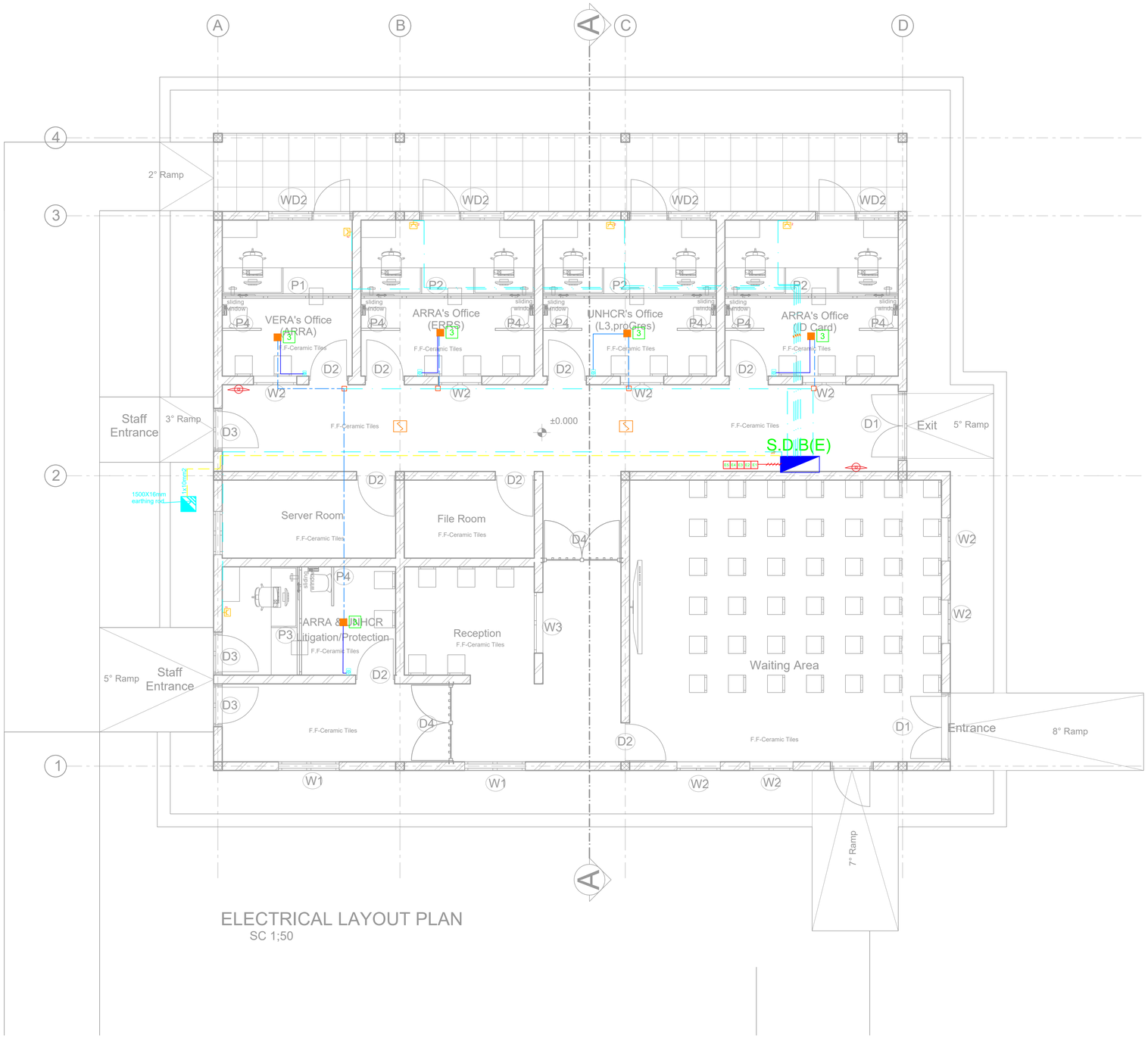

ELECTRICAL LAYOUT PLAN

SC 1;50

GENERAL NOTES:

LEGEND

NEW PARTITION

EXISTING WALL

LEGEND

SYMBOL	DESCRIPTION / MOUNTING METHOD
	AC Socket Outlet 2P+E, 220V, 16A, with shutter, surface assembly
	Junction box, surface mounting
	Terminal junction box, surface mounting
	Fan Speed Control
S	Ionisation smoke detector
	9kg portable fire extinguisher

CABLES LEGEND

SYMBOL	DESCRIPTION / MOUNTING METHOD
	Cable installed in conduit in the ground
	Cable installed on perforated tray run horizontally
	Cable installed in conduit on surface mounting with cable clips
	Earthing cable
	Switchboard - Mains Power Supply
	Manhole 400x400x400

EQUIPMENT LISTING

REFERENCE	
3	Ceiling Fan

GENERAL NOTES

- The implementation of the diferent components should be aligned by the contractor in the implementation phase, with the elements of the architectural project.
- The dimensions are given as an indication, the contractor must confirm them in place and perform precise measurements before the work is done.
- Also, they must coordinated with the architectural project.

Rev.:	Date:	Description:	Approved
	/ /		
	/ /		
	/ /		
	/ /		
	/ /		
	/ /		
	/ /		
	/ /		
	/ /		
	/ /		
0	/ /		

KEY PLAN

All information in this document is the property of UNOPS and cannot be copied anywhere but in this project without prior written consent of UNOPS.

Funded By:	Partner:
United Nations Higher Commission for Refugees Office for the AU (UNHCR)	United Nations Higher Commission for Refugees Office for the AU (UNHCR)
Program:	**Implemented By:**
Rehabilitation of UNHCR One-Stop-Shop (OSS) Registration Model	UNOPS ,ETHIOPIA OPERATIONAL HUB
Project Name:	**Design:**
Tierkidi OSS Center	UNOPS ,ETHIOPIA OPERATIONAL HUB

Drawing Title:

AC SOCKET OUTLET AND FAN

Designed by	Discipline:	Dr. No:	Tot. No:	Rev No:
YG	EL	02	05	R0

Drawn:	Checked:	Approved:	Size:	Scale:	Date:	Rev.:
MA	YG		A1	1:50	02 / 10 /2021	0

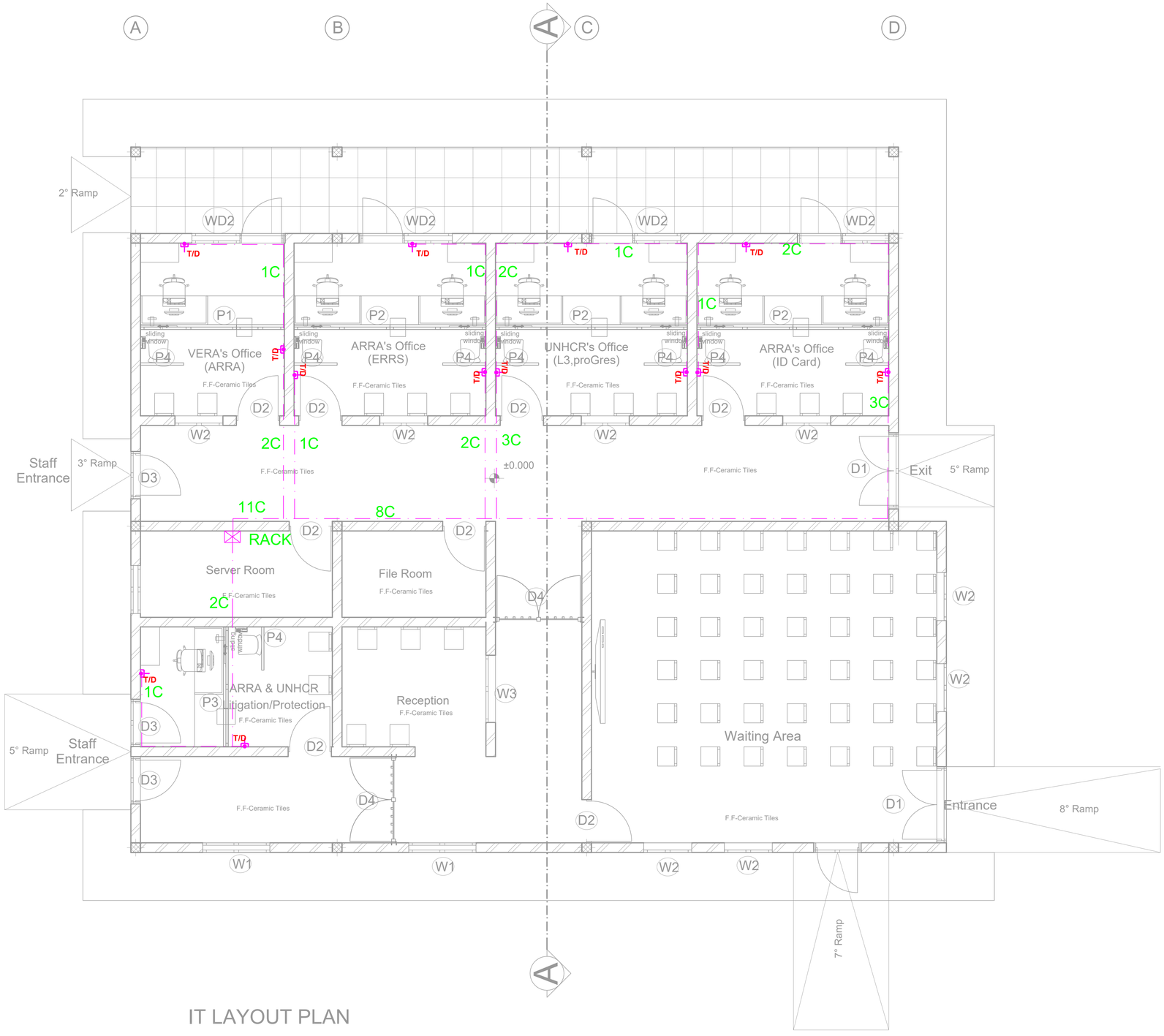

IT LAYOUT PLAN

GENERAL NOTES:

LEGEND

NEW PARTITION

EXISTING WALL

LEGEND

SYMBOL	DESCRIPTION / MOUNTING METHOD
T/D	Data/ Telephone Outlet
	Switch
	Junction box, surface mounting
	Junction

CABLES LEGEND

SYMBOL	DESCRIPTION / MOUNTING METHOD
	Cable installed in conduit in the ground
	Cable installed on perforated tray run horizontally
	Cable installed in conduit on surface mounting with cable clips
	Earthing cable
	Switchboard - Mains Power Supply
	Rack(w x d)x(h x d)

GENERAL NOTES

- The implementation of the diferent components should be aligned by the contractor in the implementation phase, with the elements of the architectural project;
- The dimensions are given as an indication, the contractor must confirm them in place and perform precise measurements before the work is done;
- All dimensions must be confirmed with the architectural project;
- All work must be done with particular care in order not to damage the pre-existing installation, to ensure the safety of the building and the workers;

Rev.:	Date:	Description:	Approved
	/ /		
	/ /		
	/ /		
	/ /		
	/ /		
	/ /		
	/ /		
	/ /		
	/ /		
	/ /		
	/ /		
0	/ /		

KEY PLAN

All information in this document is the property of UNOPS and cannot be copied anywhere but in this project without prior written consent of UNOPS.

Funded By:	Partner:
United Nations Higher Commission for Refugees Office for the AU (UNHCR)	United Nations Higher Commission for Refugees Office for the AU (UNHCR)
Program:	**Implemented By:**
Rehabilitation of UNHCR One-Stop-Shop (OSS) Registration Model	UNOPS ,ETHIOPIA OPERATIONAL HUB
Project Name:	**Design:**
Tierkidi OSS Center	UNOPS ,ETHIOPIA OPERATIONAL HUB

Drawing Title:

DATA AND TELEPHONE OUTLET

Designed by			Discipline:	Dr. No:	Tot. No:	Rev No:
YG			EL	03	05	R0
Drawn:	**Checked:**	**Approved:**	**Size:**	**Scale:**	**Date:**	**Rev.:**
MA	YG		A1	1:50	02 / 10 /2021	0

Distribution Board Schedule

Panel Name: SDB

Service Voltage: 220Vac (3 pole) 3 wire,AC	Bus Type :TPN+PE Bus Rating:80A/10KA Enclosure:Steel Sheet	Mounting: Flash

Circuit #	Load Description	Load KW	Circuit Breaker Rating(A)	# of Poles	Wire cross section (mm2)	Conduit (mm)	Phase R	Phase S	Phase T	
1	Lighting	0.29	10	2	2x2.5	16	○			
2	Socket to AC unit	1.7	16	2	3x2.5	16	○			
3	Socket to AC unit	1.7	16	2	3x2.5	16	○			
4	Socket to AC unit	1.7	16	2	3x2.5	16	○			
5	Socket to AC unit	1.7	16	2	3x2.5	16	○			
6	Socket to AC unit	1.7	16	2	3x2.5	16	○			
7	Power outlet to FAN	0.5	16	2	3x2.5	16	○			
	Reserve Space(25%)									

Main Switch	50A/1P,MCB		KW connected(Ptot)	9.29
Feeder Cable	3x10mm2		Diversity	0.9
P.V.C conduit	Ø32mm		KW Demand(PMax)	8.36
Power Source	MDB		Current(A)	47.5

GENERAL NOTES:

LEGEND

NEW PARTITION

EXISTING WALL

Rev.:	Date:	Description:	Approved
0	/ /		

KEY PLAN

All information in this document is the property of UNOPS and cannot be copied anywhere but in this project without prior written consent of UNOPS.

Funded By: United Nations Higher Commission for Refugees Office for the AU (UNHCR)

Partner: United Nations Higher Commission for Refugees Office for the AU (UNHCR)

Program: Rehabilitation of UNHCR One-Stop-Shop (OSS) Registration Model

Implemented By: UNOPS ,ETHIOPIA OPERATIONAL HUB

Project Name: Tierkidi OSS Center

Design: UNOPS ,ETHIOPIA OPERATIONAL HUB

Drawing Title: DISTRIBUTION BOARD SCHEDULE

Designed by	Discipline:	Dr. No:	Tot. No:	Rev No:
YG	EL	04	05	R0

Drawn:	Checked:	Approved:	Size:	Scale:	Date:	Rev.:
MA	YG		A1	1:50	02 / 10 /2021	0

EARTHING DETAIL

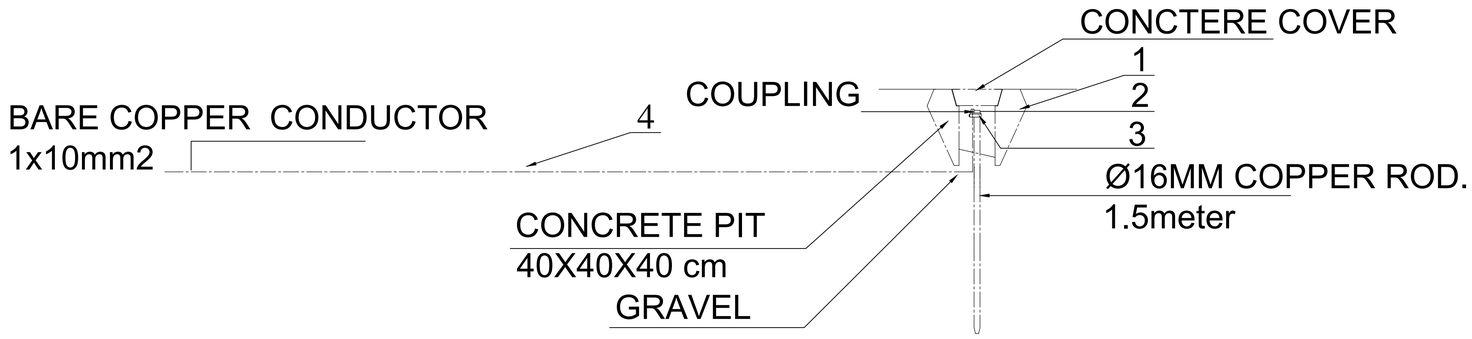

LEGEND TO EARTHING SYSTEM DETAIL

1	MANHOLE	400 x 400 x 400mm
2	DRIVIG STUD	
3	ROD TO TAPE CLAMP	
4	EARTH CONDUCTOR (bare)	1 x 10mmsq.

NOTE:

NEW ROOFING SECTION IS TO BE BONDED TO THE EXISTING LPS NETWORK AND LED DOWN WITH 50MM2 BARE COPPER WIRE TO BE CONNECTED WITH THE BUILDING EARTH ROD. DOWN CONDUCTOR TO BE FASTENED ON WALL @ EVERY 1 M

GENERAL NOTES:

Rev.:	Date:	Description:	Approved
0	/ /		

KEY PLAN

All information in this document is the property of UNOPS and cannot be copied anywhere but in this project without prior written consent of UNOPS.

Funded By: United Nations Higher Commission for Refugees Office for the AU (UNHCR)

Partner: United Nations Higher Commission for Refugees Office for the AU (UNHCR)

Program: Rehabilitation of UNHCR One-Stop-Shop (OSS) Registration Model

Implemented By: UNOPS , ETHIOPIA OPERATIONAL HUB

Project Name: Tierkidi OSS Center

Design: UNOPS ,ETHIOPIA OPERATIONAL HUB

Drawing Title: EARTHING DETAIL

Designed by	Discipline:	Dr. No:	Tot. No:	Rev No:
YG	EL	05	05	R0

Drawn:	Checked:	Approved:	Size:	Scale:	Date:	Rev.:
MA	YG		A1	1:50	02 / 10 /2021	0